FED. ROAD DIST. NO.	STATE	FED. AID PROJ. NO.	FISCAL YEAR	SHEET NO.	TOTAL SHEETS
HAWAII	HAW.	BR-083-1(58)	2023	01	129

STATE OF HAWAII

DEPARTMENT OF TRANSPORTATION

HIGHWAYS DIVISION

HONOLULU, HAWAII

PLANS FOR

KAMEHAMEHA HIGHWAY LAIELOA STREAM BRIDGE REPLACEMENT

FEDERAL-AID PROJECT NO. BR-083-1(58)

DISTRICT OF KOOLAULOA

ISLAND OF OAHU, HAWAII

INDEX TO DRAWINGS

SHEET NO.	DESCRIPTION
1	TITLE SHEET
2	STANDARD PLAN SUMMARY
3-5	GENERAL NOTES AND LEGEND
6-7	WATER POLLUTION AND EROSION CONTROL NOTES
8-9	UTILITY NOTES
10-11	TYPICAL SECTIONS
12	CONSTRUCTION PARCELS & EASEMENTS PLAN
13	CONSTRUCTION PHASING PLAN
14	EROSION AND SEDIMENT CONTROL PLAN
15	DEMOLITION PLAN
16	DIVERSION ROAD MAIN DRIVEWAY PLAN
17-18	DIVERSION ROAD PLAN AND PROFILE
19-21	DIVERSION ROAD CROSS SECTIONS
22	DIVERSION ROAD PAVEMENT MARKING PLAN
23	ACCESSIBLE PARKING PLAN AND DETAILS
24	STORM DRAIN PLAN AND PROFILE
25-26	WATER PLAN AND PROFILE
27-29	TRAFFIC CONTROL NOTES, PLAN AND DETAILS
30-31	ROADWAY PLAN AND PROFILE
32-34	ROADWAY CROSS SECTIONS
35	ROADWAY SUPERELEVATION DIAGRAM
36-37	SEWER PLAN AND PROFILE
38-39	DRIVEWAYS PLAN AND PROFILE
40-41	SHOPPING CENTER PARKING LOT RESTORATION PLAN
42	PAVEMENT MARKING & SIGNAGE NOTES AND LEGEND
43	ROADWAY PAVEMENT MARKING & SIGNAGE PLAN
44-46	GUARDRAIL NOTES & DETAILS
47-78	STRUCTURAL PLANS
79-86	BORING LOGS, LOCATION PLAN, LEGEND & NOTES
87-88	TYPICAL GEOTEXTILE FABRIC RETAINING WALL SECTIONS
89-110	ELECTRICAL PLANS
111-129	LANDSCAPING PLANS

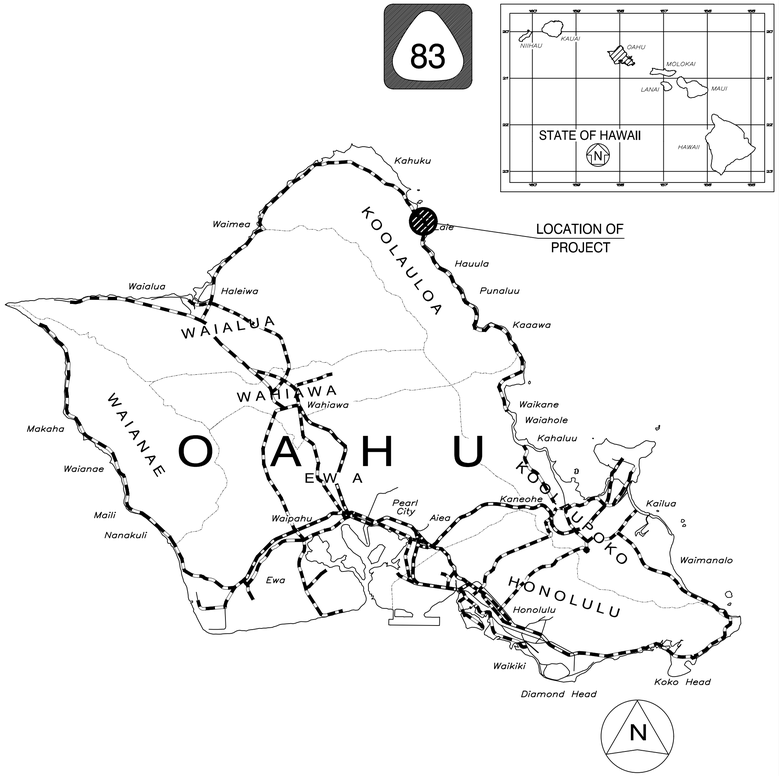

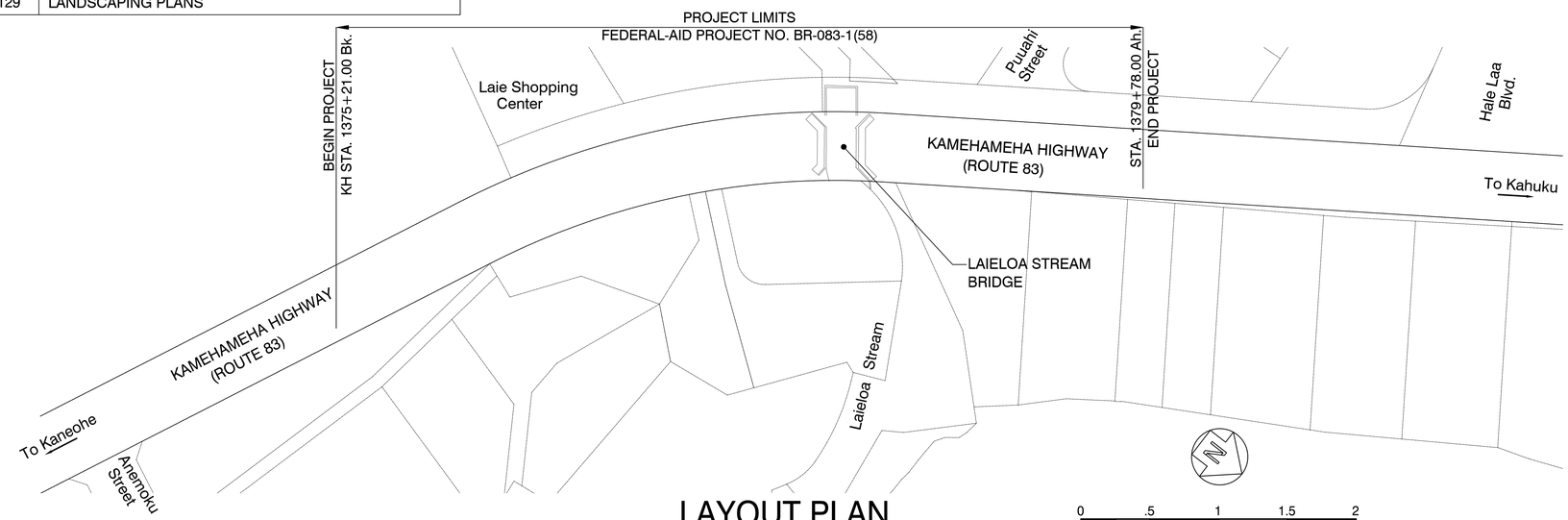

LAYOUT PLAN

LENGTH OF PROJECT . . . . 0.14 MILES

FEDERAL AID PROJECTS PREVIOUSLY CONSTRUCTED OR UNDER CONSTRUCTION

MILE POST 18.23 TO MILE POST 18.37

DESIGN DESIGNATION

ADT (2021)	18,200
ADT (2041)	20,800
DHV	1,740
K DES	8.0
D DES	55/45
T DES	4.0
T 24	5.0
V	30 MPH

DEPARTMENT OF TRANSPORTATION
STATE OF HAWAII

APPROVED:

DIR. OF TRANSPORTATION DATE

AECOM
DESIGNED BY

HWY-DD
MANAGED BY

692-7573
PHONE

SEPT 2023
DATE

ORIGINAL PLAN
NOTE BOOK No.
SURVEY PLOTTED BY
DRAWN BY
TRACED BY
DESIGNED BY
REVIEWED BY
QUANTITIES BY
CHECKED BY
DATE

PATH/FILENAME: L:\DOS\Projects_Legacy\USR\Civil\Out-Hwy\0012992-HLB\400 Tech\Drawings\01_BLB_Title Sheet.dwg

PLOT DATE: September 20, 2023 @ 10:19:55 am

LAST UPDATE: May 03, 2023 @ 04:53:28 pm

STANDARD PLANS SUMMARY

FED. ROAD DIST. NO.	STATE	FED. AID PROJ. NO.	FISCAL YEAR	SHEET NO.	TOTAL SHEETS
HAWAII	HAW.	BR-083-1(58)	2023	02	129

STANDARD PLAN NO.	TITLE	DATE
B-01 ●	NOTES & MISCELLANEOUS DETAILS	05/31/07
B-03	BACKFILL DETAILS AT EARTH RETAINING STRUCTURES	05/31/07
B-12	PRESTRESSED CONCRETE PILES & COMPRESSION SPLICE	05/31/07
	CAN DETAILS	
B-12A	PRESTRESSED CONCRETE PILES, PILE & COMPRESSION	05/31/07
	SPLICE CAN DETAILS & NOTES	
B-12B	PILE INTERACTION DIAGRAM	05/31/07
B-13	PRESTRESSED CONCRETE PILE BUILD-UP DETAILS	05/31/07

STANDARD PLAN NO.	TITLE	DATE
D-01	CATTLE GATE	05/31/07
D-02 ●	CHAIN LINK FENCE WITH TOPRAIL	05/31/07
D-03	CHAIN LINK FENCE WITHOUT TOPRAIL	05/31/07
D-04	WIRE FENCE WITH METAL POSTS	05/31/07
D-05 ●	TYPICAL DETAILS OF CURBS AND/OR GUTTERS	05/31/07
D-06	TYPICAL DETAIL OF REINFORCED CONCRETE DROP DRIVEWAY	05/31/07
D-07 ●	CENTERLINE AND REFERENCE SURVEY MONUMENTS	05/31/07
D-08	STREET SURVEY MONUMENT	05/31/07
D-15 ●	CONCRETE SIDEWALK	05/31/07
D-16	P.C.C. BUS PAD	05/31/07
D-17	P.C.C. BUS PAD	05/31/07
D-18	P.C.C. PAVEMENT LAYOUT	05/31/07
D-19	P.C.C. PAVEMENT W/ PERMEABLE BASE JOINT DETAILS	05/31/07
D-20	P.C.C. PAVEMENT W/ PERMEABLE BASE JOINT DETAILS	05/31/07
D-21	P.C.C. LONGITUDINAL JOINT DETAILS	05/31/07
D-22	P.C.C. CONNECTION TO CURBS AND GUTTERS	05/31/07
D-23	JOINTS	05/31/07

STANDARD PLAN NO.	TITLE	DATE
L-01 ●	TREE PLANTING	08/16/06
L-02 ●	TREE PLANTING	08/16/06
L-03 ●	TREE TRANSPLANTING	08/16/06
L-04 ●	PALM PLANTING	08/16/06
L-05 ●	SHRUB PLANTING	08/16/06
L-06	LANDSCAPE DETAILS	08/16/06
L-07	LANDSCAPE DETAILS	08/16/06
L-08	LANDSCAPE DETAILS	08/16/06
L-09	LANDSCAPE DETAILS	08/16/06
L-10	LANDSCAPE DETAILS	08/16/06
L-11 ●	PLANTING NOTES	08/16/06
L-12	IRRIGATION DETAILS	08/16/06
L-13	IRRIGATION DETAILS	08/16/06
L-14	IRRIGATION DETAILS	08/16/06
L-15	IRRIGATION DETAILS	08/16/06
L-16	IRRIGATION DETAILS	08/16/06
L-17	IRRIGATION DETAILS	08/16/06
L-18	IRRIGATION DETAILS	08/16/06
L-19	IRRIGATION DETAILS	08/16/06
L-20	IRRIGATION DETAILS	08/16/06
L-21	IRRIGATION DETAILS	08/16/06
L-22	IRRIGATION DETAILS	08/16/06
L-23	IRRIGATION DETAILS	08/16/06
L-24	IRRIGATION NOTES	08/16/06

STANDARD PLAN NO.	TITLE	DATE
H-01A	TYPE A CATCH BASIN	05/31/07
H-01B	TYPE B CATCH BASIN	05/31/07
H-01C	TYPE C CATCH BASIN	05/31/07
H-01D	TYPE D CATCH BASIN	05/31/07
H-01E	CATCH BASIN SECTIONS	05/31/07
H-02A	TYPE A1 CATCH BASIN	05/31/07
H-02B	TYPE B2 CATCH BASIN	05/31/07
H-02C	TYPE C1 CATCH BASIN	05/31/07
H-02D	TYPE D1 CATCH BASIN	05/31/07
H-02E	CATCH BASIN SECTION	05/31/07
H-03 ●	TYPE A, B, AND C STORM DRAIN MANHOLE	05/31/07
H-04	TYPE D STORM DRAIN MANHOLE	05/31/07
H-05	TYPICAL REINFORCING DETAILS FOR DRAINAGE STRUCTURES	05/31/07
H-06	TYPICAL REINFORCING DETAILS FOR DRAINAGE STRUCTURES	05/31/07
H-07	CATCH BASIN AND MANHOLE CASTINGS	05/31/07
H-08	TYPE 1A-9 AND 1A-9P GRATED DROP INLET	05/31/07
H-09	TYPE 2A-9 AND 2A-9P GRATED DROP INLET	05/31/07
H-10	TYPE A-9 OR A-9P STEEL FRAMES	05/31/07
H-11	TYPE A-9 AND A-9P STEEL GRATES	05/31/07
H-12	TYPE 61614P AND 1211214P GRATED DROP INLET	05/31/07
H-13	TYPE 61616P AND 1211216P GRATED DROP INLET	05/31/07
H-14	TYPE 61214P GRATED DROP INLET	05/31/07
H-15	TYPE 1211214, 1211214P, 1211216, 1211216P STEEL	05/31/07
	FRAME AND GRATES	
H-16	TYPE 61614, 61614P, 61616, 61616P STEEL FRAME	05/31/07
	AND GRATES	
H-17	TYPE 61214 STEEL FRAMES AND GRATES	05/31/07
H-18	TYPE 61214P STEEL GRATES	05/31/07
H-19	TYPE 61614B STEEL FRAME AND GRATES	05/31/07
H-20	CEMENT RUBBLE MASONRY STRUCTURES	05/31/07
H-21	CONCRETE AND CEMENT RUBBLE MASONRY STRUCTURES	05/31/07
H-22	INLET/OUTLET STRUCTURE	05/31/07
H-23	INLET/OUTLET STRUCTURE	05/31/07
H-24	FLARED END SECTION FOR CULVERTS	05/31/07
H-25	FLARED END SECTION FOR CULVERTS	05/31/07
H-26	CONCRETE SPILLWAY INLET	05/31/07
H-27	CAP COUPLING DETAILS STANDARD JOINT	05/31/07
H-28	REINFORCED CONCRETE COLLAR & JACKET	05/31/07
H-29	UNDERDRAIN CLEANOUT STEEL FRAME AND COVER	05/31/07
H-30	UNDERDRAIN CONNECTION TO DRAINAGE STRUCTURE	05/31/07

STANDARD PLAN NO.	TITLE	DATE
TE-01 ●	SIGN HEIGHT AND LOCATION	07/11/08
TE-1A ●	SIGN INSTALLATION	07/11/08
TE-02A●	GALVANIZED FLANGED CHANNEL SIGN POST MOUNTING	05/31/07
TE-02B●	GALVANIZED FLANGED CHANNEL SIGN POST MOUNTING	05/31/07
TE-02C●	GALVANIZED FLANGED CHANNEL SIGN POST MOUNTING	05/31/07
TE-03A●	GALVANIZED SQUARE TUBE SIGN POST MOUNTING	05/31/07
TE-03B●	GALVANIZED SQUARE TUBE SIGN POST MOUNTING	05/31/07
TE-04 ●	REGULATORY SIGNS	07/11/08
TE-05 ●	WARNING SIGNS	07/11/08
TE-06 ●	MISCELLANEOUS SIGNS	07/11/08
TE-07 ●	CONSTRUCTION SIGNS	07/11/08
TE-08	MISCELLANEOUS INTERSECTION SIGNS	07/11/08

STANDARD PLAN NO.	TITLE	DATE
TE-09	BIKE ROUTE SIGN & SUPPLEMENTARY PLATES	07/11/08
TE-10	INTERSTATE ROUTE MARKER	07/11/08
TE-11 ●	STATE ROUTE MARKER AND AUXILIARY MARKERS	07/11/08
TE-12	STATE ROUTE MARKER AND BORDER DETAIL FOR	07/11/08
	GUIDE SIGNS	
TE-12A	ROUTE SIGN ASSEMBLIES	07/11/08
TE-13	STREET NAME SIGN ON MAST ARM	07/11/08
TE-14 ●	MISCELLANEOUS REFLECTOR MARKERS	07/11/08
TE-15	OBJECT MARKERS	07/11/08
TE-16	MILE POSTS	07/11/08
TE-17A	CANTILEVER OVERHEAD SIGN ELEVATION & DETAILS	05/31/07
TE-17B	CANTILEVER SIGN FRAME DETAIL AND SECTION	05/31/07
TE-17C	CANTILEVER SIGN FRAME DETAIL	05/31/07
TE-17D	CANTILEVER SIGN FRAME SECTION	05/31/07
TE-17E	CANTILEVER SIGN FRAME DETAILS	05/31/07
TE-18A	TWO POST OVERHEAD SIGN FRAME ELEVATIONS	05/31/07
TE-18B	TWO POST SIGN FRAMING PLAN SECTION	05/31/07
TE-18C	TWO POST SIGN FRAMING SECTIONS AND DETAILS	05/31/07
TE-18D	TWO POST SIGN FRAME DETAILS	05/31/07
TE-18E	TWO POST SIGN FRAME DETAILS	05/31/07
TE-19A	OVERHEAD SIGN FRAMING SCHEDULE	05/31/07
TE-19B	SIGN POST DRILLED SHAFT FOUNDATION	05/31/07
TE-19C	SPREAD FOOTING	05/31/07
TE-19D	SIGN FRAME FOUNDATION SCHEDULE	05/31/07
TE-19D.1	SIGN FRAME FOUNDATION SCHEDULE	05/31/07
TE-19D.2	SIGN FRAME FOUNDATION SCHEDULE	05/31/07
TE-19D.3	SIGN FRAME FOUNDATION SCHEDULE	05/31/07
TE-19D.4	SIGN FRAME FOUNDATION SCHEDULE	05/31/07
TE-19D.5	SIGN FRAME FOUNDATION SCHEDULE	05/31/07
TE-19E	ANCHORAGE DETAILS	05/31/07
TE-19F	ANCHORAGE DETAILS	05/31/07
TE-19G	MISCELLANEOUS SIGN FRAME DETAILS	05/31/07
TE-19H	LUMINAIRE WALKWAY SUPPORT	05/31/07
TE-19J	FIXED MESSAGE LUMINAIRE SUPPORT	05/31/07
TE-19K	MISCELLANEOUS SIGN DETAILS	05/31/07
TE-19L	MISCELLANEOUS SIGN DETAILS	05/31/07
TE-19M	MISCELLANEOUS SIGN FRAME DETAILS	05/31/07
TE-20	SUPPORTS FOR GROUND MOUNTED GUIDE SIGN	05/31/07
TE-20A	SUPPORTS FOR GROUND MOUNTED GUIDE SIGN	05/31/07
TE-20B	SUPPORTS FOR GROUND MOUNTED GUIDE SIGN	05/31/07
TE-20C	SUPPORTS FOR GROUND MOUNTED GUIDE SIGN	05/31/07
TE-21A	SIGN BREAKAWAY MOUNTS	05/31/07
TE-21B	SIGN BREAKAWAY MOUNTS	05/31/07
TE-22	LAMINATED ALUMINUM SIGN PANELS (OVERHEAD)	05/31/07
TE-23	LAMINATED ALUMINUM SIGN PANELS (GROUND MOUNTED)	07/11/08
TE-24	SOLID ALUMINUM EXTRUDED SIGN PANEL AND	05/31/07

STANDARD PLAN NO.	TITLE	DATE
	ACCESSORY DETAILS	
TE-25	GUIDE SIGNS LUMINAIRE MOUNTINGS	05/31/07
TE-26 ●	RAISED PAVEMENT MARKERS AND STRIPING	07/11/08
TE-27 ●	RAISED PAVEMENT MARKERS AND STRIPING	07/11/08
TE-28	ENTRANCE AND EXIT PAVEMENT MARKINGS	07/11/08
TE-28A ●	MISCELLANEOUS PAVEMENT MARKINGS	07/11/08
TE-29 ●	PAVEMENT ARROWS AND SYMBOLS	07/11/08
TE-30 ●	PAVEMENT ALPHABETS, NUMBERS & SYMBOLS	07/11/08
TE-31 ●	PAVEMENT ALPHABETS, NUMBERS & SYMBOLS	07/11/08
TE-32	TYPE I & II TRAFFIC SIGNAL SYSTEM MISC. DETAILS	05/31/07
TE-33	TYPE II TRAFFIC SIGNAL SYSTEM	08/16/06
TE-33A.1	TYPE II TRAFFIC SIGNAL STANDARD	05/31/07
TE-33A.2	TYPE II TRAFFIC SIGNAL STANDARD	05/31/07
TE-34	LOOP DETECTOR DETAILS	07/11/08
TE-35	LOOP DETECTORS & DUCT DETAILS	07/11/08
TE-36	TRAFFIC SIGNAL DETAILS	07/11/08
TE-37	PULLBOX & COVER DETAILS	07/11/08
TE-37A	TYPE "A" TRAFFIC PULLBOX	05/31/07
TE-37B	TYPE "A" TRAFFIC PULLBOX REINFORCING	05/31/07
TE-37C	TYPE "B" TRAFFIC PULLBOX	05/31/07
TE-37D	TYPE "B" TRAFFIC PULLBOX REINFORCING	05/31/07
TE-37E	TYPE "B" TRAFFIC PULLBOX FOUNDATION	05/31/07
TE-37F	TYPE "C" TRAFFIC PULLBOX	05/31/07
TE-37G	TYPE "C" TRAFFIC PULLBOX REINFORCING	05/31/07
TE-37H	TYPE "C" TRAFFIC PULLBOX FOUNDATION	05/31/07
TE-37J	TRAFFIC PULLBOX COVER AND DETAILS	05/31/07
TE-38	TYPE III TRAFFIC SIGNAL STANDARD	05/31/07
TE-38A.1	TYPE III TRAFFIC SIGNAL STANDARD	05/31/07
TE-38A.2	TYPE III TRAFFIC SIGNAL STANDARD	05/31/07
TE-39	METAL GUARDRAIL CONNECTION TO CONCRETE BARRIER	07/11/08
TE-40	CONCRETE BARRIER TRANSITION	05/31/07
TE-40A	CONCRETE BARRIER TRANSITION SECTIONS	05/31/07
TE-41	GUARDRAIL TYPE 4 (RIGID BARRIER)	05/31/07
TE-42 ●	PORTABLE CONCRETE BARRIER	05/31/07
TE-43 ●	PORTABLE CONCRETE BARRIER	05/31/07
TE-44	GUARDRAIL TYPE 4 MISCELLANEOUS DETAILS	07/11/08
TE-45 ●	BARRICADES	07/11/08
TE-46 ●	DELINEATION & PAVEMENT MARKINGS AT NARROW BRIDGES	07/11/08
TE-47	HIGHWAY LIGHT STANDARD	05/31/07

NOTE:
STANDARD PLANS APPLICABLE TO THIS PROJECT ARE INDICATED BY A " ● " NEXT TO THE STANDARD PLAN NO. (For Example: D-07 ●)

ORIGINAL PLAN
NOTE BOOK No.
SURVEY PLOTTED BY
DRAWN BY
TRACED BY
DESIGNED BY
QUANTITIES BY
CHECKED BY
DATE

MINGXUN DING
LICENSED PROFESSIONAL ENGINEER
NO. 9246-C
HAWAII, U.S.A.

LICENSE EXPIRES 4/30/24

THIS WORK WAS PREPARED BY ME OR UNDER MY SUPERVISION

STATE OF HAWAII
DEPARTMENT OF TRANSPORTATION
HIGHWAYS DIVISION

STANDARD PLANS SUMMARY

KAMEHAMEHA HIGHWAY
Laieloa Stream Bridge Replacement
Federal-Aid Project No. BR-083-1(58)

Scale: As Shown Date: September 2023

SHEET No. 1 OF 1 SHEETS

FED. ROAD DIST. NO.	STATE	FED. AID PROJ. NO.	FISCAL YEAR	SHEET NO.	TOTAL SHEETS
HAWAII	HAW.	BR-083-1(58)	2023	03	129

GENERAL NOTES:

1. The Scope of Work for this project consists of demolishing the existing Laieloa Stream Bridge; constructing a diversion road including a temporary bridge; constructing a new bridge and approach roadways; installing guardrails and end treatments; installing signage and striping; work zone traffic control; replacing/installing street lights; and replacing/installing various utilities.

2. The Contractor is reminded of the requirements of Subsection 105.16 – Subletting of Contract, which requires him to perform work amounting to not less than 30 percent of the total contract cost less deductible items. Non-compliance with this Subsection may be grounds for rejection of bid.

3. The Contractor's attention is directed to the following Sections of the Standard Specifications and Special Provisions: Subsection 104.11 – Utilities and Services; Subsection 107.06 – Contractor Duty Regarding Public Convenience; Subsection 107.11 – Safety: Accident Prevention; Subsection 107.12 – Protection of Persons and Property; and Section 645 – Work Zone Traffic Control.

4. At the end of each day's work, the Contractor shall remove all equipment and other obstructions to permit free and safe passage of public traffic.

5. The existence and location of underground utilities, manholes, monuments and structures as shown on the plans are from the latest available data but the accuracy is not guaranteed. The encountering of other obstacles during the course of work is possible. The Contractor shall make an independent check on the ground by probing and/or checking with the various utility companies and government agencies to verify the exact locations and depths of the existing utilities and obstructions. The Contractor shall be held liable for any damages incurred to the existing facilities and/or improvements as a result of his operations. All damaged portions shall be replaced or repaired in accordance with the standards and specifications of the affected utility company at the Contractor's expense.

6. Existing drainage system will be functional at all times during construction. The Contractor is to furnish materials, equipment, labor, tools and incidentals necessary to maintain flow. This work shall be considered incidental to various contract items.

7. Earth swales shall be graded to drain. This work shall be considered incidental to the various contract items.

8. All saw cutting work shall be considered incidental to contract items.

9. The Contractor shall provide for free and safe access to and from all existing side streets at all times.

10. The Contractor shall coordinate all work within the Shopping Center with the property owner, Hawaii Reserves, Inc.

11. The Contractor shall provide for access to and from all existing driveways at all times. The Contractor shall coordinate with the Homeowner if driveway closure is required.

12. Where pedestrian walkways exist, they shall be maintained in a safe and passable condition, or other facilities for pedestrians shall be provided. Passages between walkways at intersections shall likewise be provided at all times.

13. This Project will affect bus routes, bus stops, and paratransit operations; therefore, the Contractor shall notify the Department of Transportation Services, Public Transit Division, at 768-8396, and Oahu Transit Services, Inc. (bus operations: 848-4578 or 852-6016 and paratransit operations: 454-5041 or 454-5020) of the scope of work, location, proposed closure of any street, traffic lane, sidewalk, or bus stop and duration of the project at least two weeks prior to construction.

14. The Contractor shall follow the requirements of various permits and Best Management Practices (BMP) during the construction.

15. The Contractor shall provide an ADA-accessible pedestrian crossing and bike crossing over Laieloa Stream, as shown in construction drawings.

16. No work or equipment shall be located or take place within 10' of any overhead wires or any HECO utility pole. No excavation shall take place within 5' of any HECO utility pole.

17. The Contractor will immediately report to the Engineer and utility companies damage discovered or caused by his work to any utilities.

18. The Contractor is advised that in addition to other Contractors working in the same areas, various utility companies (or their contractors) including Hawaiian Electric Company, Hawaiian Telephone Company, Oceanic Cable, The Gas Company, and the Laie Water Company may be performing work within the project area.

19. The Contractor shall coordinate all work with other Contractors in the areas. In case of unresolved conflict among contractors regarding access or work sites, the Engineer will make the final determination of priorities.

20. All holes, depressions and wheel ruts shall be filled and compacted with PMA Pavement, prior to resurfacing. This work shall be incidental to PMA Pavement.

21. Smooth riding connections shall be constructed at all limits of the project, including the beginning and end of project, connecting approaches, side streets and driveways as shown on the plans and/or as directed by the Engineer.

22. All guardrail spacer blocks shall be recycled plastic blockouts or polyethylene offset blocks approved by DOT.

23. The Contractor shall clean and remove any accumulation of aggregates along the roadside within 15 feet of the edge of pavement. This work shall be considered incidental to the various contract items.

24. Demolishing, removing and disposing of existing drainage structures shall be considered incidental to the various contract items.

25. All necessary permits shall be obtained by the Contractor at his own cost.

26. The Contractor shall comply with the directives of the State of Hawaii Occupational Safety and Health Law (DOSH). Any citation (fine) received by the State for noncompliance by the Contractor shall be deducted from the progress payment.

27. When the diversion road is not in use, all lanes shall be opened to traffic during the morning peak hours from 6:30 a.m. to 8:30 a.m., during the afternoon peak hours from 3:30 p.m. to 6:00 p.m. and off work hours or as directed by the Engineer. Only one lane of highway shall be closed during work hours.

28. Unprotected pavement dropoffs greater than 2" shall not be allowed during non-working hours, except where approved by the Engineer in writing.

29. Contractor shall maintain at least one paved shoulder free and clear of debris for pedestrian and bicycle traffic at the end of each work day.

30. No material and/or equipment shall be stockpiled or otherwise stored within the highway right-of-way except at locations designated in writing and approved by the Engineer. If use of location is approved by the Engineer, the Contractor shall obtain a permit to use the property within the highway right-of-way from the State Right-Of-Way Branch at telephone no. 692-7332.

31. The Contractor shall indemnify and be solely responsible for the protection of adjacent properties, utilities, curbs, and existing structures from damage due to construction. Repairing any damage shall be at the Contractor's own expense, to the satisfaction of the Engineer.

32. All temporary traffic control (TTC) elements, including but no limited to, pedestrian and worker safety, and flagger control, shall conform to the latest adopted version of the Manual on Uniform Traffic Control Devices (MUTCD).

33. The Contractor shall immediately repair any damage to the existing sensor loops and new sensor loops.

34. The Contractor shall make immediate adjustments to any disrupted timing cycles relating to the sensor loops, detectors, or signal pullboxes.

ORIGINAL PLAN	SURVEY PLOTTED BY	DATE
	DRAWN BY	"
NOTE BOOK	TRACED BY	"
	DESIGNED BY	"
	QUANTITIES BY	"
No.	CHECKED BY	"

MINGXUN DING
LICENSED PROFESSIONAL ENGINEER
NO. 9246-C
HAWAII, U.S.A.

LICENSE EXPIRES 4/30/24

THIS WORK WAS PREPARED BY ME OR UNDER MY SUPERVISION

STATE OF HAWAII
DEPARTMENT OF TRANSPORTATION
HIGHWAYS DIVISION

GENERAL NOTES AND LEGEND

KAMEHAMEHA HIGHWAY
Laieloa Stream Bridge Replacement
Federal-Aid Project No. BR-083-1(58)

Scale: As Shown Date: September 2023

SHEET No. 1 OF 3 SHEETS

FED. ROAD DIST. NO.	STATE	FED. AID PROJ. NO.	FISCAL YEAR	SHEET NO.	TOTAL SHEETS
HAWAII	HAW.	BR-083-1(58)	2023	04	129

GENERAL CONSTRUCTION NOTES:

1. The Contractor shall notify all agencies to verify the actual location of all utilities in the project area prior to excavating. The Contractor shall coordinate all work.

2. All work called for on the plans and not itemized in the proposal and all work not called for but required for the construction of this project shall be considered incidental to various bid items.

3. The Contractor shall restore to their original condition all improvements damaged as a result of the construction, including pavements, embankments, curbs, signs, landscaping, structures, utilities, walls, fences, etc. unless provided for specifically in the proposal. Demolition and restoration of existing items shall be incidental to various bid items.

4. The Contractor shall replace or restore any project Right of Way and property boundary pins disturbed or removed by the Contractor's operations and work. Such replacement or restoration of property pins will not be paid for separately, but will be considered incidental to the various pay items in the Proposal Schedule.

5. The Contractor shall observe and comply with the administrative rules of The Department of Health regarding noise control of Oahu.

6. No section of incomplete guardrail, footing and/or excavation shall be left unshielded at the end of each work day. Intermediate concrete barriers and crash cushion end treatments used for shielding shall meet current SOH DOT standards and guidelines along with manufacturer's specifications. All shielding used during construction shall be considered incidental to various guardrail items.

7. Contractor shall maintain landscaping within the State Right-of-Way and Construction Parcels for the duration of the project until final acceptance. The cost shall be incidental to various contract items.

8. Contractor shall maintain the temporary bridge in good condition with regard to strength and safety and ride-ability. Contractor shall maintain waterway opening. If debris accumulates within the waterway opening or on any part of the structure, the Contractor shall promptly remove the debris.

9. Closing of Diversion Bridge: If for any reason or at any time the temporary structure's ability to safely carry traffic is in question, the Contractor shall be responsible for immediately taking the actions necessary to protect traffic, repair and reopen the temporary structure. When a Contractor closes a temporary structure he shall immediately notify the Engineer and the appropriate law enforcement agency. Water elevations exceeding the design year high-water elevation (100-year elevation = 9.30' MSL) or an excessive accumulation of debris within the waterway opening shall be sufficient reasons to close the temporary structure. The design year high-water elevation shall be painted with fluorescent paint on the temporary structure, at a visible location. This shall be included as incidental to Maintenance of Traffic Control, as per plan.

10. Minimize the risk of spreading invasive species and movement of plants and soil material between worksites by cleaning all excess soil from equipment, materials and personnel before mobilizing to the worksite and before moving equipment or materials to another worksite.

NOTES FOR CONSTRUCTION WITHIN STATE RIGHT-OF-WAY

1. The Contractor shall obtain a Permit to Perform Work Upon State Highway from the Oahu District, State Highways, at 727 Kakoi Street, prior to commencement of work within the State highway right-of-way.

2. Construction and restoration of all existing highway facilities within State right-of-way shall be done in accordance with all applicable sections of the 2005 Standard Specifications for Road and Bridge Construction, and the Specifications for Installation of Miscellaneous Improvements within State Highways, of the State Highways Division.

3. Work may be performed only between the hours of 8:30 a.m. and 3:00 p.m. , Monday through Friday, except holidays, unless otherwise permitted by the Engineer.

4. The Contractor shall provide, install, and maintain all necessary signs, lights, flares, barricades, markers, cones, and other protective items, and shall take necessary precautions for the protection, convenience, and safety of public traffic. All such protective facilities and precautions to be taken shall conform with the "Administrative Rules of Hawaii Governing the Use of Traffic Control Devices at Work Sites on or Adjacent to Public Streets and Highways", adopted by the Director of Transportation, and the current U.S. Federal Highway Administration "Manual on Uniform Traffic Control Devices for Streets and Highways, Part VI – Standards and Guides for Traffic Controls for Street and Highway Construction, Maintenance, Utility and Incident Management Operations" and NCHRP 350.

5. No material and/or equipment shall be stockpiled or otherwise stored within the highway right-of-way, except at locations designated in writing and approved by the Engineer.

6. The Contractor shall be required to provide adequate, safe, non-skid bridging material over any trench, including shoring, when trenching in pavement areas to handle all types of vehicular traffic.

7. No trench shall be opened more than 200 feet in advance of the installed and tested pipe and/or ductline. No jumps or spaces will be permited unless approved in writing by the Engineer.

8. Drainage within the project limits shall be maintained at all times to allow freeflow.

9. All regulatory, guide and construction signs and barricades shall be high intensity reflective sheeting.

10. Stop work and contact the State Historic Preservation Division (SHPD) of the Department of Land and Natural Resources immediately should any unidentified archaeological site or remains (such as artifacts, shells, bones, charcoal deposits, road or coral alignments, pavings or walls) be encountered during construction.

11. The Contractor shall retain the service of a qualified archeaologist during the construction.

12. The Contractor shall inform the State DOT Highway Oahu District Permit Office at 831-6712 at least five (5) working days prior to any lane closures or changes to lane closures.

COLD PLANING NOTES

1. All saw cutting work shall be considered incidental to Cold Planing.

2. The Contractor shall compact the existing aggregate base in accordance with Section 304 – Aggregate Base Course. This preparation work shall be considered incidental to the new Asphalt Concrete Base Course, and will not be paid for separately.

3. The vertical pavement drop-off shall not exceed 2-inches. If a vertical pavement drop-off exists at the end of each day's cold planing and paving, the Contractor shall provide a wedge with a 48:1 transition taper for transverse drop-off and no steeper than 6:1 for longitudinal drop-off, as approved by the Engineer. This work shall be considered incidental to Cold Planing.

4. The Contractor shall lower manholes prior to Cold Planing, backfill with hot mix and re-adjust after final paving. This work shall be considered incidental to Manhole Adjustments.

5. Unless otherwise shown on plans, the Contractor shall remove asphalt concrete from existing gutters and swales and shall exercise caution in doing so. The Contractor shall be held liable for any damage caused to the gutters and swales by this removal. This work shall be considered incidental to Cold Planing.

GENERAL DIVERSION NOTES

1. All fill slopes that do not meet the clear zone requirements set forth by the latest edition of the AASHTO Roadside Design Guide shall be shielded by NCHRP Report 350 and HDOT approved devices.

ORIGINAL PLAN	SURVEY PLOTTED BY ____ DATE ____
	DRAWN BY :
	TRACED BY :
NOTE BOOK	DESIGNED BY :
	WRITTEN BY :
	QUANTITIES BY :
No. ____	CHECKED BY :

MINGXUN DING
LICENSED PROFESSIONAL ENGINEER
NO. 9246-C
HAWAII, U.S.A.

LICENSE EXPIRES 4/30/24

THIS WORK WAS PREPARED BY ME OR UNDER MY SUPERVISION

STATE OF HAWAII
DEPARTMENT OF TRANSPORTATION
HIGHWAYS DIVISION

GENERAL NOTES AND LEGEND

KAMEHAMEHA HIGHWAY
Laieloa Stream Bridge Replacement
Federal-Aid Project No. BR-083-1(58)

Scale: As Shown Date: September 2023

SHEET No. 2 OF 3 SHEETS

FED. ROAD DIST. NO.	STATE	FED. AID PROJ. NO.	FISCAL YEAR	SHEET NO.	TOTAL SHEETS
HAWAII	HAW.	BR-083-1(58)	2023	05	129

BIOLOGICAL RESOURCE PROTECTION NOTES:

1. To avoid harm to Hawaiian Hoary bats, no trees or woody vegetation over 15 feet in height shall be trimmed or removed between June 1 and September 15. No barbed wire for fencing shall be used.

2. Should a Hawaiian Short-Eared Owl nest be discovered during construction, Department of Forestry and Wildlife shall be notified and a 100-foot buffer shall be established around the nest in which no work or clearing of vegetation shall occur. Hawaiian Short-Eared Owl can be identified by its brown feathers, round face, and yellow eyes. They are active both during the day and at night. Their nests consist of a small scrape in the ground, lined with grass and feathers. Only nests with eggs or young birds require protection.

3. Before construction activities begin, the Contractor shall hire a qualified biologist to survey the site and check for any nests within 100 feet of the work area to ensure nesting birds are not disturbed and to prevent trapping chicks and/or adults in their nest cavities. The biologist shall also be made available to monitor during construction activities. This work shall be paid under Pay Item 627.1000 Force Account. In accordance with comments received from Division of Forestry and Wildlife (DOFAW):

   - The qualified biologist(s) shall have experience performing surveys for waterbird and seabirds.
   - In areas where vegetated streambank would be disturbed, waterbird nest searches shall be conducted by a qualified biologist before any work is conducted and after any stop in work of 3 days or more.
   - Any documented nests or brood within the project vicinity shall be reported to the U.S. Fish and Wildlife Services wtihin 48 hours.
   - If a nest with eggs or chicks is discovered, work shall cease within 100 feet of the nest until the chicks have fledged and/or until direction is provided by the Biological Surveyor or the State.
   - If an endangered Hawaiian waterbird (Hawaiian duck, Hawaiian coot or Hawaiian moorhen) is present or flies into the area during ongoing activities, all activities within 100 feet of the bird shall cease. Work may continue after the bird leaves the area on its own accord.
   - Listed seabirds such as the Newell's shearwater and Hawaiian petrel are known to nocturnally traverse the area to and from their mountain nesting grounds and the sea. In particular, fledging seabirds are highly attracted to bright lights, they become confused and fall to the ground. Night time work requiring the use of construction lights shall not be performed between September 15 and December 15.
   - All construction project staff shall be provided with information about seabird fallout. All downed birds shall be taken to Sea Life Park for rehabilitation.

4. Before construction activities begin, the Contractor shall hire a qualified biologist to conduct a visual survey near the mouth of the Laieloa Stream just prior to the start of each work day to ensure that no basking sea turtles are present. The biologist shall also be made available to monitor during construction activities. This work shall be paid under Pay Item 627.1000 Force Account.
   - If a basking sea turtle is found within the project area, or approach the project area while construction is occurring, all mechanical or construction activities within 100 feet shall be stopped until the animal(s) voluntarily leave.
   - No activities will take place between a basking turtle and the ocean.
   - Night time work shall be avoided, to the extent practical, during the hatching season, November through December.
   - Construction project staff will not attempt to feed, touch, ride or otherwise intentionally interact with any sea turtle.

5. All outdoor lighting, including night time work should that be permitted, shall be fully shielded and directed towards the ground.

6. Turbidity and siltation from project related work shall be minimized and contained through the use of silt containment devices and curtailment of work during adverse tidal and weather conditions.

7. No project-related materials shall be stockpiled on the beach, in the intertidal zone, reef flats, or stream channel.

8. No construction activities will take place on beaches or dunes.

9. No construction vehicles or equipment will be operated on the beach or in dune environments.

10. Any project-related debris or trash will be removed from the beach.

11. Any construction-related debris that may pose an entanglement threat to federally listed species shall be removed from the project site if not actively being used and at the conclusion of the construction project.

12. For any delays encountered due to Biological Resource Protection, a no cost time extension will be the exclusive relief granted.

LEGEND

- New Pavement/Reconstruction
- New Concrete Pavement
- Transitional Cold Planing Areas
- Resurfacing Limits
- Existing Electrical Line
- New Electrical Line
- Existing Joint Pole
- Existing Power Pole
- Existing Electric Manhole
- Adjusted Elec. MH Frame/Cover
- New Electric Manhole
- Existing Sewer Line
- New Sewer Line
- Existing Telephone Line
- New Telephone Line
- Existing Telephone Pole
- Existing Telephone Manhole
- Adjusted Tele. MH Frame/Cover
- New Telephone Manhole
- Existing Water Air Valve
- Adjusted Water Air Valve
- New Water Air Valve
- Existing Water Meter
- Adjusted Water Meter
- New Water Meter
- Existing Fire Hydrant
- New Underdrain
- Existing Monument
- Adjusted Monument
- New Monument
- Existing Traffic Sign
- Existing Highway Lighting Standard
- New Highway Lighting Standard
- Existing Water Line
- Existing Water Manhole
- Adjusted Water MH Frame/Cover
- New Water Manhole
- Existing Water Valve Box
- Adjusted Water Valve Box
- New Water Valve Box

ABBREVIATIONS

Ah.	Ahead	LF	Linear Feet
ARV	Air Relief Valve	Max	Maximum
AC	Asphaltic Concrete	ML	Matchline
Bk.	Back	Min	Minimum
BL	Baseline	Mauka	Mountainside
BB	Bottom of Bank	NTS	Not to Scale
CL	Centerline	No.	Number
Conc	Concrete	Makai	Oceanside
CP	Construction Parcel	O/S	Offset
		Pvmt	Pavement
CY	Cubic Yard	PC	Point of Curvature
DOT	Department of Transportation	PI	Point of Intersection
		PT	Point of Tangency
Det	Detail	RPM	Reflective Pavement Marker
Div	Diversion		
DMH	Storm Drain Manhole	Rt	Right
Ea	Each	ROW	Right-of-Way
Esmt	Easement	Sht	Sheet
EP	Edge of Pavement	SF	Square Feet
ES	Edge of Shoulder	Std	Standard
EL	Elevation	Sta	Station
EMB	Embankment	Struct	Structural
EXC	Excavation	SE	Superelevation
Exist	Existing	TB	Top of Bank
Hwy	Highway	Typ	Typical
Lt	Left	VC	Vertical Curve
Lc	Length of Curve	WL	Waterline

ORIGINAL PLAN	SURVEY PLOTTED BY	DATE
	DRAWN BY	"
	TRACED BY	"
NOTE BOOK	DESIGNED BY	"
	QUANTITIES BY	"
No.	CHECKED BY	"

MINGXUN DING
LICENSED PROFESSIONAL ENGINEER
NO. 9246-C
HAWAII U.S.A.

LICENSE EXPIRES 4/30/24

THIS WORK WAS PREPARED BY ME OR UNDER MY SUPERVISION

STATE OF HAWAII
DEPARTMENT OF TRANSPORTATION
HIGHWAYS DIVISION

GENERAL NOTES AND LEGEND

KAMEHAMEHA HIGHWAY
Laieloa Stream Bridge Replacement
Federal-Aid Project No. BR-083-1(58)

Scale: As Shown Date: September 2023

SHEET No. 3 OF 3 SHEETS

FED. ROAD DIST. NO.	STATE	FED. AID PROJ. NO.	FISCAL YEAR	SHEET NO.	TOTAL SHEETS
HAWAII	HAW.	BR-083-1(58)	2023	06	129

WATER POLLUTION AND EROSION CONTROL NOTES:

A. GENERAL:

1. See Special Provisions Section 209 – Water Pollution and Erosion Control. Section 209 describes but is not limited to: submittal requirements; scheduling of a water pollution and erosion control conference with the Engineer; construction requirements; method of measurement; and basis of payment. In addition, Appendix A lists potential pollutant sources and corresponding BMPs used to mitigate the pollutants.

2. Follow the guidelines in the current HDOT Construction Best Management Practices Field Manual in developing, installing and maintaining the Best Management Practices (BMP) for the project. For any conflicting requirements between the Manual and applicable bid documents, the applicable bid documents will govern. Should a requirement not be clearly described within the applicable bid documents, the Contractor shall notify the Engineer immediately for interpretation. For the purposes of clarification under Note A.2, "applicable bid documents" include the construction plans, standard specifications, Special Provisions, Permits, and the Storm Water Pollution Prevention Plan (SWPPP) when applicable.

3. Follow the guidelines in the Honolulu's City & County "Rules Relating to Soil Erosion Standards and Guidelines" along with applicable Soil Erosion Guidelines for projects on Maui, Molokai, Kauai, and Hawaii.

4. The Engineer may assess liquidated damages of up to $27,500 for non-compliance of each BMP requirement and each requirement stated in Section 209 and special provisions, for every day of non-compliance. There is no maximum limit on the amount assessed per day.

5. The Engineer will deduct the cost from the progress payment for all citations received by the Department for non-compliance, or the Contractor shall reimburse the State for the full amount of the outstanding cost incurred by the State.

6. If necessary, install a rain gage prior to any field work including the installation of any site-specific best management practices. The rain gage shall have a tolerance of at least 0.05 inches of rainfall. Install the rain gage on the project site in an area that will not deter rainfall from entering the gage opening. Do not install in a location where rain water may splash into rain gage. The rain gage installation shall be stable and plumbed. Do not begin field work until the rain gage is installed and site-specific best management practices are in-place.

7. Submit Site-Specific BMP Plan to the Engineer along with a completed Site-Specific BMP Review Checklist within 30 calendar days of contract execution. The Site-Specific BMP Review Checklist may be obtained from http://www.stormwaterhawaii.com.

B. WASTE DISPOSAL:

1. Waste Materials. Collect and store all waste materials in a securely lidded metal dumpster or roll off container with cover to keep rain out or loss of waste during windy conditions. The dumpster shall meet all local and State solid waste management regulations. Deposit all trash and construction debris from the site in the dumpster. Empty the dumpster weekly or when the container is two-thirds full, whichever is sooner. Do not bury construction waste materials onsite. The Contractor's supervisory personnel shall be instructed regarding the correct procedure for waste disposal. Post notices stating these practices in the office trailer, on a weatherproof bulletin board, or other accessible location acceptable to the Engineer. The Contractor shall be responsible for seeing that these procedures are followed. Submit the Solid Waste Disclosure Form for Construction Sites to the Engineer within 21 calendar days of date of award. Provide a copy of all the disposal receipts from the facility permitted by the Department of Health to receive solid waste to the Engineer monthly. This should also include documentation from any intermediary facility where solid waste is handled or processed.

2. Hazardous Waste. Dispose all hazardous waste materials in the manner specified by local or State regulations and by the manufacturer. The Contractor's site personnel shall be instructed in these practices and shall be responsible for seeing that these practices are followed.

3. Sanitary Waste. Collect all sanitary waste from the portable units a minimum of once per week, or as required. Position sanitary facilities where they are secure and will not be tipped over or knocked down.

C. EROSION AND SEDIMENT CONTROL INSPECTION AND MAINTENANCE PRACTICES:

1. For projects with an NPDES Permit for Construction Activities, inspect at the following intervals. For construction areas discharging to nutrient or sediment impaired waters, inspect all control measures at least once each week and within 24 hours of any rainfall event of 0.25 inches or greater within a 24 hour period. For construction areas discharging to waters not impaired for nutrient or sediments, inspect all control measure weekly. Inspections are only required during the project's normal working hours. The discharge point water classification may be found in the SWPPP.

2. Maintain all measures in good working order. If repair is necessary, initiate repair immediately and complete by the close of the next work day if the problem does not require significant repair or replacement, or if the problem can be corrected through routine maintenance. When installation of a new erosion or sediment control or a significant repair is needed, install the new or modified control or complete the repair no later than 7 calendar days from the time of discovery. "Immediately" means the Contractor shall take all reasonable measures to minimize or prevent discharge of pollutants until a permanent solution is installed and made operational. If a problem is identified at a time in the day in which it is too late to initiate repair, initiation of repair shall begin on the following work day.

3. Remove built-up sediment from silt fence when it has reached one-third the height of the fence. Remove sediment from other perimeter sediment control devices when it has reached one-half the height of the device.

4. Inspect silt screen or fence for depth of sediment, tears, to verify that the fabric is securely attached to the fence posts or concrete slab and to verify that the fence posts are firmly in the ground. Inspect and verify the bottom of the silt screen is buried a minimum of 6 inches below the existing ground.

5. Inspect temporary and permanent seeding and planting for bare spots, washouts and healthy growth.

6. Complete and submit to the engineer a maintenance inspection report within 24 hours after each inspection.

7. Provide a stabilized construction entrance at all points of exit onto paved roads to reduce vehicle tracking of sediments. Include stabilized construction entrance in the Water Pollution, Dust, and Erosion Control submittals. Minimum length should be 50 feet. Minimum width should be 30 feet. Minimum depth should be 12 inches or as recommended by the soils engineer and underlain with geo-textile fabric. If minimum dimensions cannot be met, provide other stabilization techniques that remove sediment prior to exit. Clean the paved street adjacent to the site entrance daily or as required to remove any excess mud, cold-planed materials, dirt or rock tracked from the site. Do not hose down the street without containing or vacuuming wash water. Cover dump trucks hauling material from the construction site with a tarpaulin. Remove sediment tracked onto the street, sidewalk, or other paved area by the end of the day in which the track-out occurs.

8. Include designated Concrete Washout Area(s) in the Water Pollution, Dust, and Erosion Control submittals.

9. Submit the name of a specific individual designated responsible for inspections, maintenance and repair activities and filling out the inspection and maintenance report.

10. Personnel selected for the inspection and maintenance responsibilities shall receive training from the Contractor. They shall be trained in all the inspection and maintenance practices necessary for keeping the erosion and sediment controls used onsite in good working order.

11. Contain, remove, and dispose slurry generated from saw cutting of pavement in accordance with approved BMP practices. Do not allow discharge into the drainage system or State waters.

12. For projects with an NPDES Permit for Construction Activities, immediately initiate stabilizing exposed soil areas upon completion of earth-disturbing activities for areas where earth-disturbing activities have permanently or temporarily ceased. Earth-disturbing activities have permanently ceased when clearing and excavation within any area of the construction site that will not include permanent structures has been completed. Earth-disturbing activities have temporarily ceased when clearing, grading, and excavation within any area of the site that will not include permanent structures will not resume (i.e., the land will be idle) for a period of 14 or more calendar days, but such activities will resume in the future. For construction areas discharging into waters not impaired for nutrients sediments, complete initial stabilization within 14 calendar days after the temporary or permanent cessation of earth-disturbing activities. For construction areas discharging into nutrient or sediment impaired waters, complete initial stabilization within 7 calendar days after the temporary or permanent cessation of earth-disturbing activities. Classification of water at the discharge point may be found in the SWPPP.

ORIGINAL PLAN	SURVEY PLOTTED BY	DATE
	DRAWN BY	
NOTE BOOK	TRACED BY	
	DESIGNED BY	
	QUANTITIES BY	
No.	CHECKED BY	

MINGXUN DING
LICENSED PROFESSIONAL ENGINEER
NO. 9246-C
HAWAII U.S.A.

LICENSE EXPIRES 4/30/24

THIS WORK WAS PREPARED BY ME OR UNDER MY SUPERVISION

STATE OF HAWAII
DEPARTMENT OF TRANSPORTATION
HIGHWAYS DIVISION

WATER POLLUTION AND EROSION CONTROL NOTES

KAMEHAMEHA HIGHWAY
Laieloa Stream Bridge Replacement
Federal-Aid Project No. BR-083-1(58)

Scale: As Shown Date: September 2023

SHEET No. 1 OF 2 SHEETS

FED. ROAD DIST. NO.	STATE	FED. AID PROJ. NO.	FISCAL YEAR	SHEET NO.	TOTAL SHEETS
HAWAII	HAW.	BR-083-1(58)	2023	07	129

WATER POLLUTION AND EROSION CONTROL NOTES (CONT.):

D. GOOD HOUSEKEEPING BEST MANAGEMENT PRACTICES:

1. Materials Pollution Prevention Plan

a. Applicable materials or substances listed below are expected to be present onsite during construction. Other materials and substances not listed below shall be added to the inventory.

Concrete	Cleaning Solvents
Detergents	Wood
Paints (enamel and latex)	Masonry Block
Metal Studs	Herbicides and Pesticides
Tar	Curing Compounds
Fertilizers	Adhesives
Petroleum Based Products	

b. Use Material Management Practices to reduce the risk of spills or other accidental exposure of materials and substances to storm water runoff. Make an effort to store only enough product as is required to do the job.

c. Store all materials stored onsite in a neat, orderly manner in their appropriate containers and if possible under a roof or other enclosure.

d. Keep products in their original containers with the original manufacturer's label.

e. Do not mix substances with one another unless recommended by the manufacturer.

f. Whenever possible, use a product up completely before disposing of the container.

g. Follow manufacturer's recommendations for proper use and disposal.

h. Conduct a daily inspection to ensure proper use and disposal of materials onsite.

2. Hazardous Material Pollution Prevention Plan

a. Keep products in original containers unless they are not resealable.

b. Retain original labels and Safety Data Sheets (SDS), formerly Material Safety Data Sheets (MSDS).

c. Dispose of surplus products according to manufacturers' instructions and local and State regulations.

3. Onsite and Offsite Product Specific Plan

The following product specific practices shall be followed onsite:

a. Petroleum Based Products: Monitor all onsite vehicles for leaks and perform regular preventive maintenance to reduce the chance of leakage. Store petroleum products in tightly sealed containers which are clearly labeled. Apply asphalt substances used onsite according to the manufacturer's recommendation.

b. Fertilizers: Apply fertilizers used only in the minimum amounts recommended by the manufacturer and federal, state, and local requirements. Avoid applying just before a heavy rain event. Apply at the appropriate time of year for the location, and preferably timed to coincide as closely as possible to the period of maximum vegetation uptake and growth. Once applied, work fertilizer into the soil to limit exposure to storm water. Do not apply to storm conveyance channels with flowing water. Storage shall be in a covered shed or in an area where fertilizer will not come into contact with precipitation or stormwater. Transfer the contents of any partially used bags of fertilizer to a sealable plastic bin to avoid spills.

c. Paints: Seal and store all containers when not required for use. Do not discharge excess paint to the drainage system, sanitary sewer system, or State waters. Dispose properly according to manufacturers' instructions and State and local regulations.

d. Concrete Trucks: Washout or discharge concrete truck drum wash water only at a designated site as far as practicable from storm drain inlets or State waters. Do not discharge water in the drainage system or State waters. Disposal by percolation is prohibited. Clean disposal site as required or as requested by the Engineer.

4. Spill Control Plan

a. Post a spill prevention plan to include measures to prevent and clean up each spill.

b. The Contractor shall be the spill prevention and cleanup coordinator. Designate at least three site personnel who shall receive spill prevention and cleanup training. These individuals shall each become responsible for a particular phase of prevention and cleanup. Post the names of responsible spill personnel in the material storage area on a weatherproof bulletin board or other accessible location acceptable to the Engineer and in the office trailer onsite.

c. Clearly post manufacturers' recommended methods for spill cleanup. Make site personnel aware of the procedures and the location of the information and cleanup supplies.

d. Keep ample materials and equipment necessary for spill cleanup in the material storage area onsite.

e. Clean up all spills immediately after discovery.

f. Keep the spill area well ventilated. Personnel shall wear appropriate protective clothing to prevent injury from contact with a hazardous substance.

g. Report spills of toxic hazardous material to the appropriate State or local government agency, regardless of the size. Where a leak, spill, or other release containing a hazardous substance or oil in an amount equal to or in excess of a reportable quantity established under either 40 CFR Part 110, 40 CFR Part 117, or 40 CFR Part 302 occurs during a 24-hour period, the Contractor shall notify the Engineer as soon as the Contractor has knowledge of the discharge. The Engineer will notify the National Response Center (NRC) at (800) 424-8802, the Clean Water Branch during regular business hours at 586-4309, and the Hawaii State Hospital Operator at 247-2191 and the Clean Water Branch (DOH-CWB) via email at cleanwaterbranch@doh.hawaii.gov during non-business hours immediately. The Contractor shall also provide to the Engineer, within 7 calendar days of knowledge of the release, a description of the release, the circumstances leading to the release, and the date of the release. The Engineer will provide this information to the DOH-CWB. The Engineer will provide information to the NRC if requested.

E. PERMIT REQUIREMENTS:

1. The calculated land disturbance area for this project based on the construction plans is 1.70 acres not including Contractor Staging and Storage areas. If the total of the disturbed area and the Contractor Staging and Storage area is one acre or greater, the Contractor shall obtain the NPDES Construction Activities Permit using HDOT's latest SWPPP template. See Hawaii Administrative Rules Chapter 11-55, Appendix C for the definition of land disturbance. The Contractor shall be responsible for obtaining the required NPDES Construction Activities Permit and complying with the requirements of HAR 11-55 including, but not limited to:

a. Deadlines for initiating and completing initial stabilization

b. Increased inspection frequency and installation of rain gage if applicable

c. Deadlines to initiate and complete repairs to BMPs

d. Reporting requirements and corrective action reports

2. Comply with all applicable State and Federal Permit conditions. Permits may include but are not limited to the following:

a. NPDES Permit for Construction Activities

b. NPDES Permit for Construction Dewatering

F. SITE-SPECIFIC BMP REQUIREMENTS:

Each BMP below is referenced to the corresponding section of the current HDOT Construction Best Management Practices Field Manual and appropriate Supplemental Sheets. The Manual may be obtained from the HDOT Statewide Stormwater Management Program Website at http://www.stormwaterhawaii.com/resources under Construction Best Management Practices Field Manual. Supplemental BMP sheets are located at http://stormwaterhawaii.com/contractors/contractors_BMPmanual.aspx under Concrete Curing and Irrigation Water.

The requirements for Water Pollution, Dust, and Erosion Control submittals are included in Section 209 of the Hawaii Standard Specifications for Road and Bridge Construction dated 2005 and applicable Special Provisions. A list of pollutant sources and corresponding BMP used to mitigate the pollutants are included in Section 209 of the Special Provisions under Appendix A.

Follow the requirements below:

1. Protect all Drainage Inlets receiving runoff from disturbed areas (SC-1).

2. Contain on-site runoff using Perimeter Sediment Controls
   a. SC-7 Silt Fence or Filter Fabric Fence
   b. SC-2 Vegetated Filter Strips and Buffers
   c. SC-6 Compost Filter Berm/Sock
   d. SC-8 Sandbag Barrier
   e. SC-9 Brush or Rock Filter

3. Control offsite runoff from entering construction area
   a. EC-3 Run-On Diversion
   b. EC-6 Earth Dike, Swales. and Ditches

4. Incorporate applicable Site Management BMP
   a. SM-1 Employee Training
   b. SM-2 Material Delivery and Storage
   c. SM-3 Stockpile Management
   e. SM-6 Solid Waste Management
   f. SM-7 Sanitary Waste Management
   g. SM-9 Hazardous Materials and Waste Management
   h. SM-10 Spill Prevention and Control
   i. SM-11 Vehicle and Equipment Cleaning
   j. SM-12 Vehicle and Equipment Maintenance
   k. SM-13 Vehicle and Equipment Refueling
   l. SM-14 Scheduling
   m. SM-15 Location of Potential Sources of Sediment
   n. SM-16 Preservation of Existing Vegetation
   o. SM-18 Dust Control

5. Contain pollutants within the Construction Staging/Storage Area BMP with applicable Perimeter Sediment Controls and Site Management BMP. Include a Stabilized Construction Entrance/Exit (SC-11) for all areas which exit onto a paved street. Restrict vehicle access to these points.

6. Manage Concrete Waste including installing a Concrete Washout Area (SM-4) and properly disposing of Concrete Curing Water (California Stormwater BMP Handbook NS-12 Concrete Curing).

7. Remove saw cut slurry and hydrodemolition water from the site by vacuuming. Provide storm drain protection and/or perimeter sediment controls during saw cutting and hydrodemolition work.

ORIGINAL PLAN
NOTE BOOK No.
SURVEY PLOTTED BY
DRAWN BY
TRACED BY
DESIGNED BY
QUANTITIES BY
CHECKED BY
DATE

MINGXUN DING
LICENSED PROFESSIONAL ENGINEER
NO. 9246-C
HAWAII, U.S.A.

LICENSE EXPIRES 4/30/24

THIS WORK WAS PREPARED BY ME OR UNDER MY SUPERVISION

STATE OF HAWAII
DEPARTMENT OF TRANSPORTATION
HIGHWAYS DIVISION

WATER POLLUTION AND EROSION CONTROL NOTES

KAMEHAMEHA HIGHWAY
Laieloa Stream Bridge Replacement
Federal-Aid Project No. BR-083-1(58)

Scale: As Shown Date: September 2023

SHEET No. 2 OF 2 SHEETS

FED. ROAD DIST. NO.	STATE	FED. AID PROJ. NO.	FISCAL YEAR	SHEET NO.	TOTAL SHEETS
HAWAII	HAW.	BR-083-1(58)	2023	08	129

HAWAII ONE CALL CENTER

1. Before you conduct any excavation in the public right of way or on private property, call the Hawaii One Call Center at least five (5) working days before you plan to dig. Be sure to give them the address and location of the nearest cross street(s) near where you plan to dig.

   Call 811 toll-free 24 hours a day.
   For more information, go to www.callbeforeyoudig.org

2. The Hawaii One Call Center will contact all utility companies to tone, mark or identify the location of their underground utilities for free. Mark the area where you plan to excavate in White and label all of the other utilities as listed below.

RED	Electric power lines, cables, or conduits, and lighting cables.
YELLOW	Gas, oil, steam, petroleum or other hazardous liquid or gaseous materials.
ORANGE	Communications, cable TV, alarm or signal lines, cables, or conduits.
BLUE	Water, Irrigation, and slurry lines.
GREEN	Sewers, storm sewer facilities or other drain lines.
WHITE	Proposed excavation.
PINK	Temporary survey markings.
PURPLE	Reclaimed water, irrigation and slurry lines.

WATER SYSTEM NOTES:

1. Unless otherwise specified, all materials and construction of water system facilities and appurtenances shall be in accordance with the HAWAII STANDARD SPECIFICATIONS FOR ROAD AND BRIDGE CONSTRUCTION, dated 2005, as amended, of the Hawaii Highways Division, Department of Transportation, and the City and County of Honolulu Board of Water Supply's "WATER SYSTEM STANDARDS', DATED 2002, THE "WATER SYSTEM EXTERNAL CORROSION CONTROL STANDARDS", VOLUME 3, DATED 1991, and all subsequent amendments and additions.

2. The existence and location of underground utilities and structures as shown on the plans are from the latest available data, but are not guaranteed as to their accuracy or the encountering of other obstacles during the course of the work. The Contractor shall be responsible and pay for all damages to existing utilities. The Contractor shall not assume that where no utilities are shown, that none exist.

3. The contractor shall be responsible for the protection of all waterlines during Construction. The contractor shall be especially careful when excavating behind waterlines, tees, and bends wherever there is a possibility of waterline movement due to the removal of the supporting earth beyond the existing reation blocks. The Contractor shall take whatever measures necessary to protect the waterlines, such as constructing special reaction blocks and/or modifying his construction method.

4. The Contractor shall notify Laie Water Company in writing one week prior to commencing construction activities.

5. Prior to any excavating, the Contractor shall verify in the field, the location of existing waterlines and appurtenances.

6. Any adjustments to the existing water system required during construction, to meet the requirements of the Laie Water Company Standards, whether shown on the plans or not, shall be done by the Contractor at no cost to the Laie Water Company.

7. The contractor shall adjust all manhole frames/valve boxes/meter boxes within the resurfaced areas. The contractor shall be responsible for "referencing" these manholes/valve boxes/meter boxes to facilitate the adjustments.

8. Maintain 3'-0" minimum cover for all existing waterlines from new finish grade. Any adjustments to the existing water system to meet the minimum cover, whether shown on plans or not, shall be done by the Contractor at no cost to Laie Water Company.

9. Two-way blue reflective hydrant markers Type DB shall be installed at all fire hydrant locations.

ORIGINAL PLAN
NOTE BOOK No.
SURVEY PLOTTED BY
DRAWN BY
TRACED BY
DESIGNED BY
QUANTITIES BY
CHECKED BY
DATE

MINGXUN DING
LICENSED PROFESSIONAL ENGINEER
NO. 9246-C
HAWAII, U.S.A.

LICENSE EXPIRES 4/30/24

THIS WORK WAS PREPARED BY ME OR UNDER MY SUPERVISION

STATE OF HAWAII
DEPARTMENT OF TRANSPORTATION
HIGHWAYS DIVISION

UTILITY NOTES

KAMEHAMEHA HIGHWAY
Laieloa Stream Bridge Replacement
Federal-Aid Project No. BR-083-1(58)

Scale: As Shown Date: September 2023

FED. ROAD DIST. NO.	STATE	FED. AID PROJ. NO.	FISCAL YEAR	SHEET NO.	TOTAL SHEETS
HAWAII	HAW.	BR-083-1(58)	2023	09	129

SEWER NOTES:

1. All sewer construction shall be performed in accordance with the City's "Standard Specifications", September 1986, the Department of Environmental Services (ENV) "Wastewater System Design Standards", July 2017 and "Wastewater System Standard Details", July 2017, current City practices and Revised Ordinances of Honolulu, 1990 as amended.

2. In the event that any change in alignment or grade for the proposed sewers are required due to unforeseen conflicts with other utilities, the Engineer In Charge or the maker of the plans shall be responsible for the required changes which are to be presented to the Department of Planning and Permitting (DPP) for approval.

3. The Contractor shall notify the Construction Management Branch, Wastewater Engineering and Construction Division, ENV at 768-8785, 768-8769 or 768-8755 to arrange for inspection services and submit five (5) sets of approved construction plans to the Wastewater Branch, DPP seven (7) days prior to commencement of sewer work. The Contractor shall pay for all inspection costs.

4. Crushed rock cradle is permitted where soil is stable. In areas of unstable soil the maker of the plans and the Construction Engineer will determine the pipe support required.

5. The underground pipes, cables or ductlines known to exist by the Engineer from his research of records are indicated on the plans. The Contractor shall verify the location and depth of the facilities, including and affecting sewer lines, in the presence of the Wastewater inspector and exercise proper care in excavating the area. The Contractor shall be responsible and shall pay for all damaged utilities.

6. Sewer laterals shall be clear of and not conflicting with any other utility. Minimum horizontal and vertical clearances shall be strictly observed and followed.

7. Slope for gravity sewer laterals shall be a minimum of 2.00%, unless otherwise noted.

8. Building plumbing facilities shall be controlled by sewer lateral inverts.

9. The Contractor shall be responsible for maintaining continuous sewer service to all affected areas during construction.

10. The Consulting Engineer shall submit to the Wastewater Branch, DPP "As-Built" tracings and electronic files of the construction plans as actually constructed, showing all changes from the original plans.

11. The Contractor shall be responsible for any sewage spills caused during construction. The Contractor shall notify the State Department of Health and utilize appropriate sampling and analyzing procedures. The Contractor shall be responsible for all public notifications and press releases.

12. The Contractor shall install "Rainstopper" manhole inserts in all sewers with type "SA" frame and cover.

13. The Contractor shall obtain approval for advance sewer riser agreement at the DPP and obtain Building Permit for plumbing work before any advance riser is made.

14. All sewer pipe joints within easements shall be wrapped with geotextile root barrier.

15. Geotextile fabric to envelope the pipe cradle and select backfill material shall be provided where water or unstable soil conditions are encountered.

16. Confined Space

For entry by City personnel, including inspectors, into a permit-required confined space as defined in 29 CFR part 1910.146(b), the Contractor shall be responsible for providing:

1. All safety equipment required by the confined space regulations applicable to all parties other than the construction industry, to include, but not limited to, the following:
   A. Full body harnesses for up to two personnel.
   B. Lifeline and associated clips.
   C. Ingress/egress and fall protection equipment.
   D. Two-way radios (walkie-talkies) if out of line-of-sight.
   E. Emergency (escape) respirator (10 minute duration).
   F. Cellular telephone to call for emergency assistance.
   G. Continuous gas detector (calibrated) to measure oxygen, hydrogen sulfide, carbon monoxide and flammables (capable of monitoring at a distance at least 20 feet away).
   H. Personal multi-gas detector to be carried by inspector.

2. Continuous forced air ventilation adequate to provide safe entry conditions.

3. One attendant/rescue personnel topside (two, if conditions warrant it).

17. When connecting to a live sewer line, the Contractor shall abide by all conditions that the State Department of Health sets forth to mitigate any wastewater spill that may occur. The Contractor shall inform the City inspector five (5) working days prior to the actual connection. The Contractor shall be responsible for any fines and penalties due to any spills resulting from the connection.

18. No rungs shall be installed inside new sewer manholes.

19. For sewer manhole (SMH) adjustments upward less than 3", see Standard Detail S-28. For SMH adjustments upward greater than 3" or for any adjustments downward, reconstruct SMH top from below the cone section.

20. If the Contractor encounters flow monitoring devices such as special sewer manhole covers embedded with solar panels, notify C&C of Honolulu, ENV-CSM at 768-7272 to coordinate temporary removal.

21. The Contractor shall maintain visibility and maintenance access to live sewer manhole locations at all times, including during non-work hours and paving operations.

22. The Contractor shall use a manhole debris catching device when performing manhole height adjustment work and remove any construction debris that has fallen into the manhole. Disposal of construction debris in the sewer system is strictly prohibited.

23. For precast sewer manholes, the Consulting Engineer shall submit four (4) sets of shop drawings to the Wastewater Branch, DPP for approval. After the shop drawings are approved, the manufacturer shall notify the Construction Management Branch, Wastewater Engineering and Construction Division, ENV, at 768-8785, 768-8769 or 768-8755 to arrange for inspection services for concrete pours made at its plant seven (7) days prior to pour.

HAWAII GAS NOTES:

1. Hawaii Gas pipelines in the project area are plastic coated and cathodically protected. The Contractor shall be extremely careful when working near these gas pipelines.

2. Written clearances must be obtained from Hawaii Gas, Maps and Records Department, 515 Kamakee Street, at least five (5) working days prior to starting excavation near these gas pipelines.

3. Since gas line locations on field maps are approximate, the Contractor, after obtaining written clearance, shall call Hawaii One Call Center a minimum of five (5) working days before starting excavation to arrange for field location of the existing gas pipelines. The telephone number is 811 or 1-866-423-7287.

4. The Contractor shall excavate and backfill around gas pipelines in the presence of Hawaii Gas. All backfill within six inches of any gas pipeline shall be select cushion material approved by Hawaii Gas.

5. For relocation of any gas pipeline, the Contractor shall notify Hawaii Gas five (5) working days before starting work. The telephone number is 594-5574. The contractor shall provide the necessary excavation and backfill, obtain traffic permits, and restore pavement, sidewalks, and other facilities. Any relocation of gas facilities shall be done by Hawaii Gas and paid for by the Contractor.

6. The Contractor shall notify Hawaii Gas immediately after any damage has been caused to existing gas pipelines, coatings, or its cathodic protection devices. The telephone number is 535-5933, 24 hours a day. The Contractor shall be liable for any damage to Hawaii Gas' facilities. Repair work on such damage shall be done by Hawaii Gas with payment for this work to be borne by the Contractor.

HAWAII GAS NOTES (CONT.):

7. Minimum vertical and horizontal clearance between the gas pipelines and other pipelines, conduits, ductlines, or other facilities shall be 12 inches. Adequate support and protection for gas pipelines exposed in the trench shall be provided by the Contractor and approved by Hawaii Gas.

8. The Contractor shall work in an expeditious manner in order to keep the uncovered gas pipelines exposed for as short a period of time as possible.

ORIGINAL PLAN	SURVEY PLOTTED BY	DATE
	DRAWN BY	
NOTE BOOK	TRACED BY	
	DESIGNED BY	
	QUANTITIES BY	
No.	CHECKED BY	

MINGXUN DING
LICENSED PROFESSIONAL ENGINEER
NO. 9246-C
HAWAII, USA

LICENSE EXPIRES 4/30/24

THIS WORK WAS PREPARED BY ME OR UNDER MY SUPERVISION

STATE OF HAWAII
DEPARTMENT OF TRANSPORTATION
HIGHWAYS DIVISION

UTILITY NOTES

KAMEHAMEHA HIGHWAY
Laieloa Stream Bridge Replacement
Federal-Aid Project No. BR-083-1(58)

Scale: As Shown Date: September 2023

SHEET No. 2 OF 2 SHEETS

FED. ROAD DIST. NO.	STATE	FED. AID PROJ. NO.	FISCAL YEAR	SHEET NO.	TOTAL SHEETS
HAWAII	HAW.	BR-083-1(58)	2023	10	129

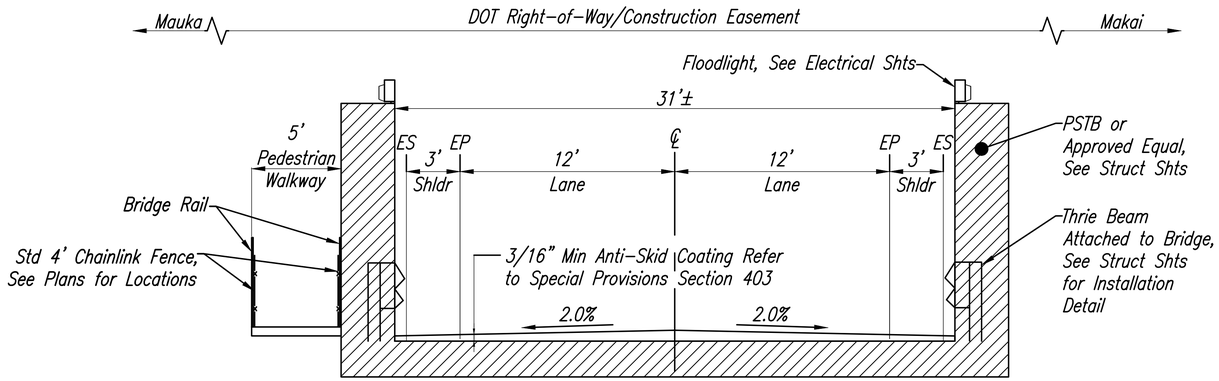

Prefabricated Steel Truss Bridge (PSTB)

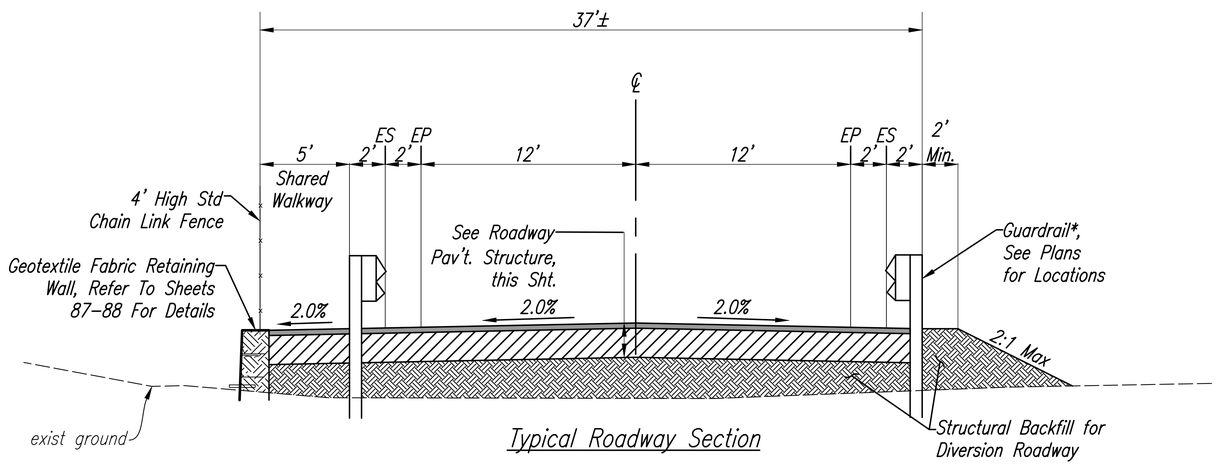

Typical Roadway Section

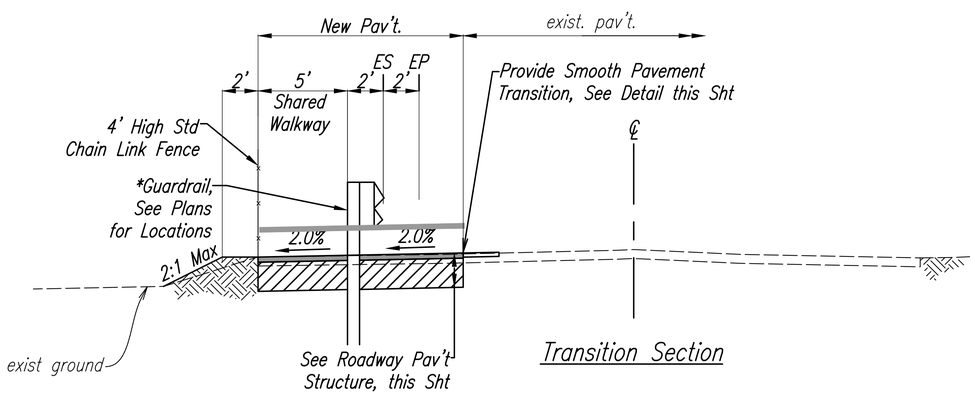

Transition Section

*Probing for guardrail post installation shall be incidental to Pay Item 606.0300

TYPICAL SECTIONS – DIVERSION ROAD

Scale: 1"=4'

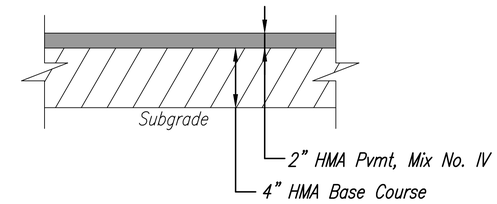

Diversion Roadway Pavement Structure

Not to Scale

Note: Subgrade Shall be Prepared in Accordance with Pavement Justification Report. The Cost for this Work is Incidental to the Pvmt Structure.

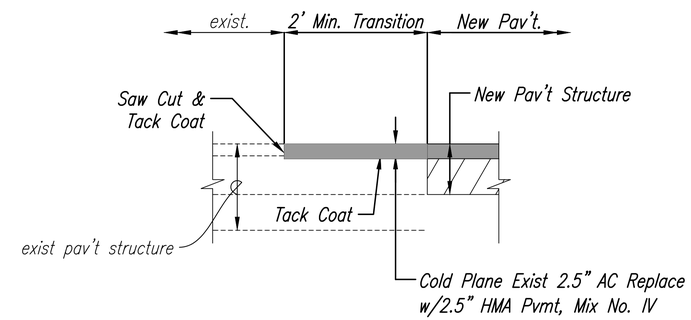

Pavement Transition (Cold Planing)*

Scale: 1"=1'

ORIGINAL PLAN	SURVEY PLOTTED BY	DATE
	DRAWN BY	
	TRACED BY	
NOTE BOOK	DESIGNED BY	
	QUANTITIES BY	
No.	CHECKED BY	

MINGXUN DING
LICENSED PROFESSIONAL ENGINEER
NO. 9246-C
HAWAII U.S.A.

LICENSE EXPIRES 4/30/24

THIS WORK WAS PREPARED BY ME OR UNDER MY SUPERVISION

STATE OF HAWAII
DEPARTMENT OF TRANSPORTATION
HIGHWAYS DIVISION

TYPICAL SECTIONS
DIVERSION ROAD

KAMEHAMEHA HIGHWAY
Laieloa Stream Bridge Replacement
Federal-Aid Project No. BR-083-1(58)

Scale: As Shown Date: September 2023

SHEET No. 1 OF 2 SHEETS

FED. ROAD DIST. NO.	STATE	FED. AID PROJ. NO.	FISCAL YEAR	SHEET NO.	TOTAL SHEETS
HAWAII	HAW.	BR-083-1(58)	2023	11	129

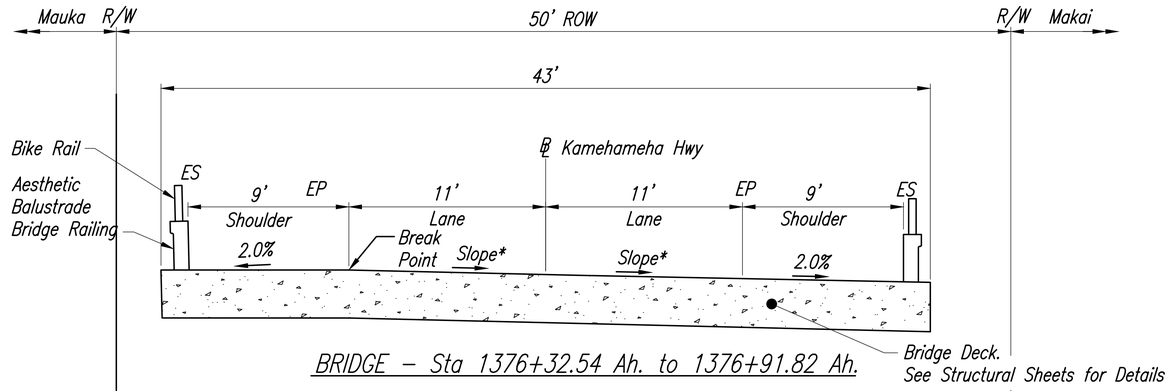

BRIDGE – Sta 1376+32.54 Ah. to 1376+91.82 Ah.

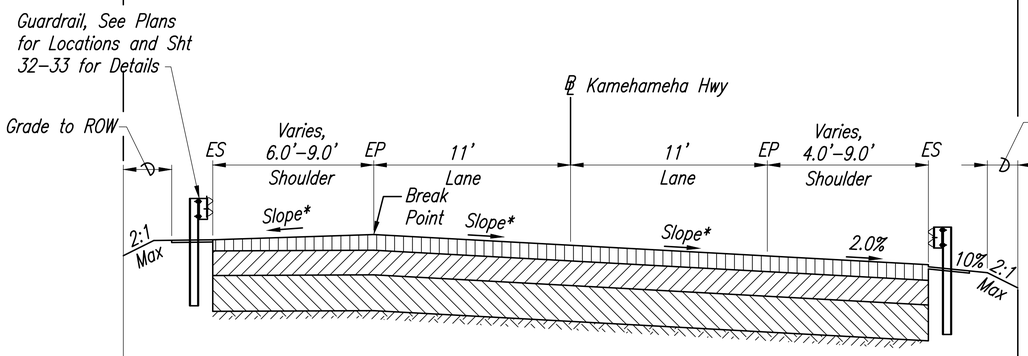

KAMEHAMEHA HIGHWAY – Sta 1375+21.00 Bk. to Sta 1376+12.54 Ah.; Sta 1377+11.82 Ah. to Sta 1379+78.00 Ah.

* Refer to Sht 35, Superelevation Diagram for Roadway Cross Slopes

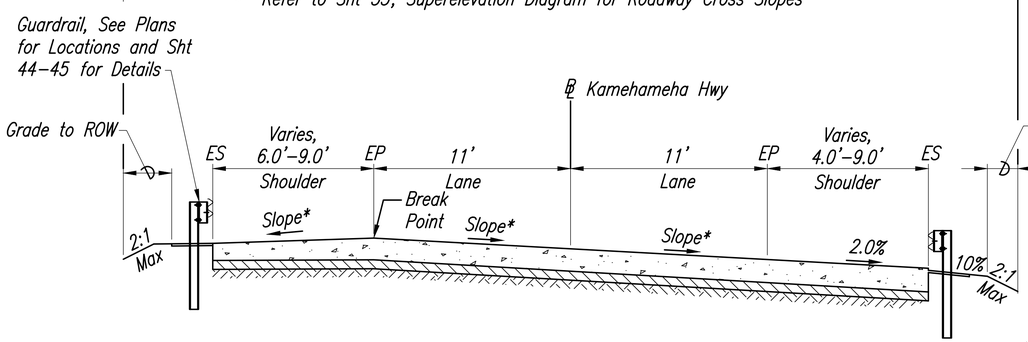

BRIDGE APPROACH – Sta 1376+14.54 Ah. to Sta 1376+32.54 Ah.; Sta 1376+91.82 Ah. to Sta 1377+09.82 Ah.

* Refer to Sht 35, Superelevation Diagram for Roadway Cross Slopes
* Refer to Structural Sheets for Bridge Approach Details

TYPICAL SECTIONS – KAMEHAMEHA HIGHWAY

Scale: 1"=4'

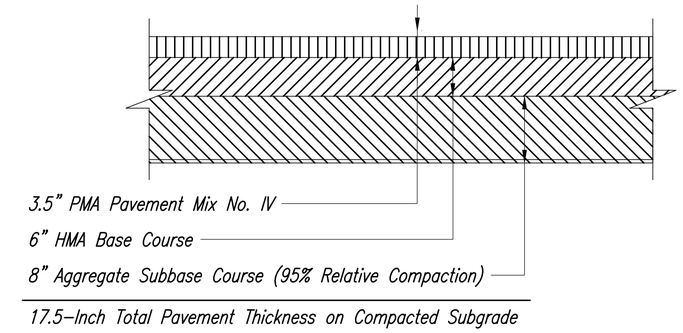

Final Roadway Pavement Structure

Scale: Not To Scale

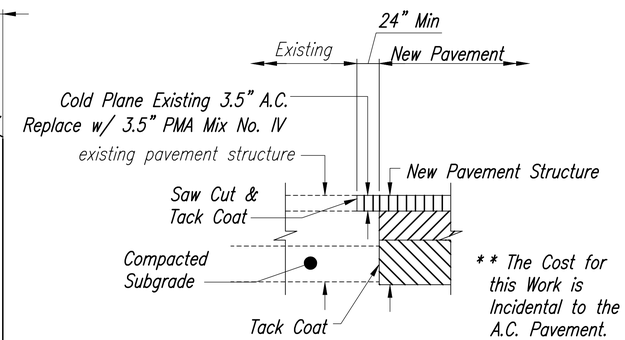

Existing A.C. Pavement Connection Detail to New A.C. Pavement**

Scale: Not To Scale

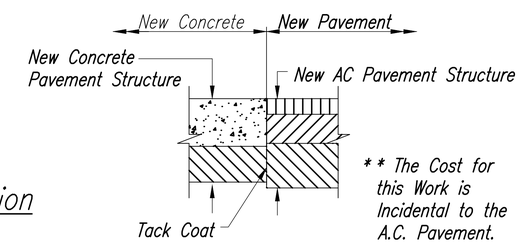

New A.C. Pavement Connection Detail to New Concrete Pavement**

Scale: Not To Scale

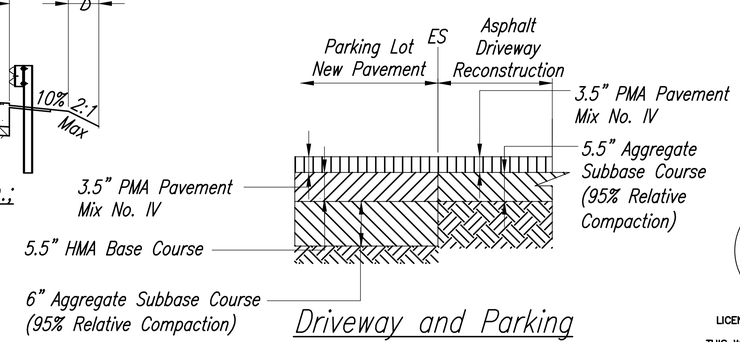

Driveway and Parking Lot Reconstruction

Scale: Not To Scale

MINGXUN DING
LICENSED PROFESSIONAL ENGINEER
NO. 9246-C
HAWAII, U.S.A.

LICENSE EXPIRES 4/30/24

THIS WORK WAS PREPARED BY ME OR UNDER MY SUPERVISION

STATE OF HAWAII
DEPARTMENT OF TRANSPORTATION
HIGHWAYS DIVISION

TYPICAL SECTIONS
KAMEHAMEHA HIGHWAY
KAMEHAMEHA HIGHWAY
Laieloa Stream Bridge Replacement
Federal-Aid Project No. BR-083-1(58)

Scale: As Shown Date: September 2023

SHEET No. 2 OF 2 SHEETS

ORIGINAL PLAN
NOTE BOOK No.
SURVEY PLOTTED BY
DRAWN BY
TRACED BY
DESIGNED BY
QUANTITIES BY
CHECKED BY
DATE

FED. ROAD DIST. NO.	STATE	FED. AID PROJ. NO.	FISCAL YEAR	SHEET NO.	TOTAL SHEETS
HAWAII	HAW.	BR-083-1(58)	2023	12	129

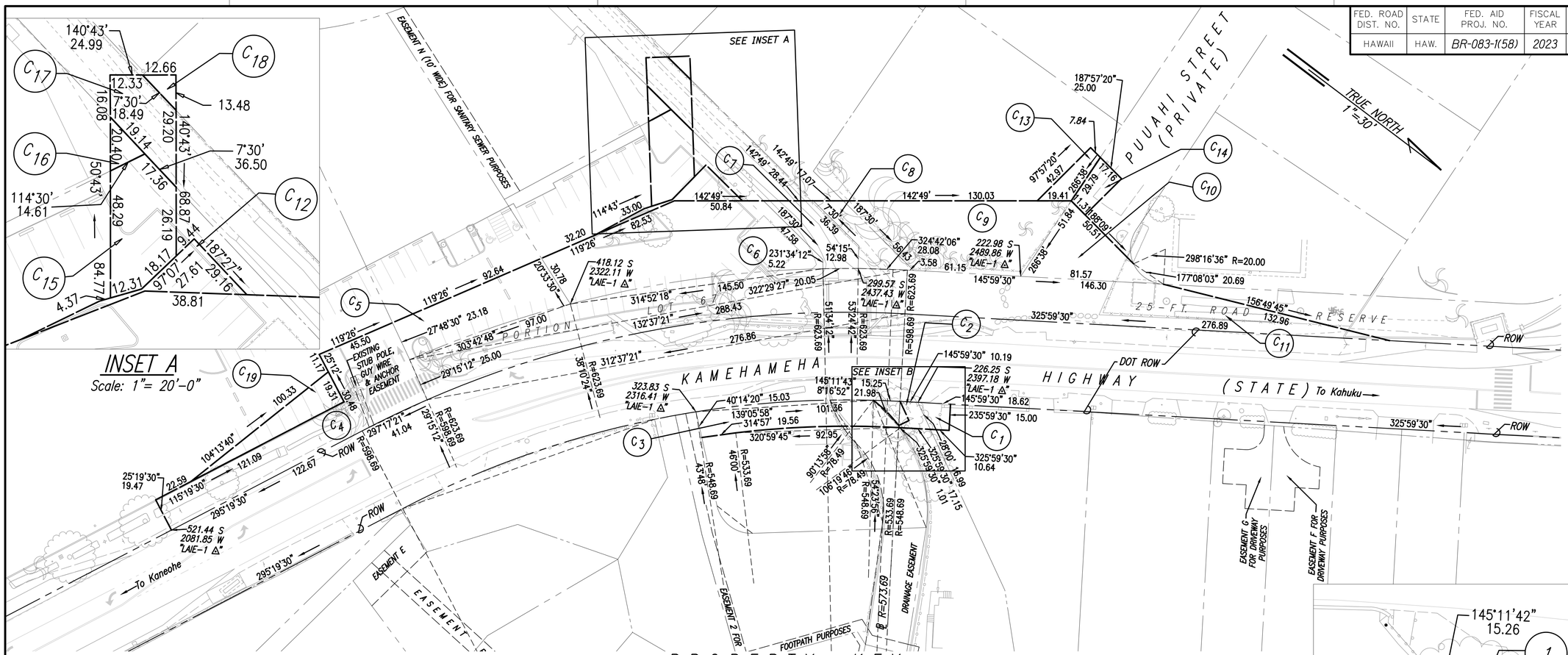

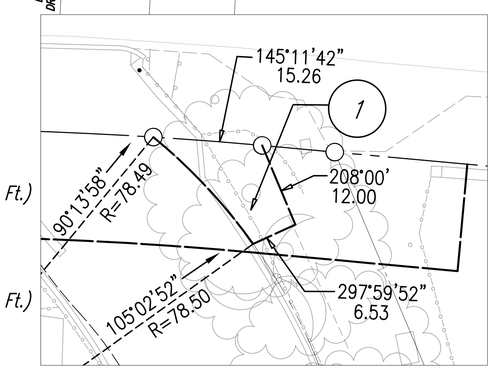

0 10 20 30
HORIZ: 1" = 10' FEET

INSET B
Scale: 1"= 10'-0"

PROPERTY KEY

C_1 Construction Parcel
Area: 0.005 Acres: (219 Sq. Ft.)
T.M.K.: (1) 5-5-03: 201
Brent & Katie Speed

C_2 Construction Parcel
Area: 0.007 Acres: (309 Sq. Ft.)
T.M.K.: (1) 5-5-11: 070
Jennifer McCarty

C_3 Construction Parcel
Area: 0.037 Acres: (1,625 Sq. Ft.)
T.M.K.: (1) 5-5-11: 068
Property Reserve Inc

C_4 Construction Parcel
Area: 0.104 Acres: (4,514 Sq. Ft.)
T.M.K.: (1) 5-5-14: 001
Property Reserve Inc

C_5 Construction Parcel
Area: 0.055 Acres: (2,405 Sq. Ft.)
T.M.K.: (1) 5-5-13: 078
Property Reserve Inc

C_6 Construction Parcel
Area: 0.127 Acres: (5,551 Sq. Ft.)
T.M.K.: (1) 5-5-13: 079
Property Reserve Inc

C_7 Construction Parcel
Area: 0.023 Acres: (1,022 Sq. Ft.)
T.M.K.: (1) 5-5-13: 076
Property Reserve Inc

C_8 Construction Parcel
Area: 0.017 Acres: (759 Sq. Ft.)
T.M.K.: (1) 5-5-13: 075
Benjamin D. Martin

C_9 Construction Parcel
Area: 0.091 Acres: (3,944 Sq. Ft.)
T.M.K.: (1) 5-5-13: 080
Ethel Makaaa, K. Lua, Kupele Kahinu

C_{10} Construction Parcel
Area: 0.039 Acres: (1,679 Sq. Ft.)
Property Reserve Inc

C_{11} Construction Parcel
Area: 0.285 Acres: (12,421 Sq. Ft.)
T.M.K.: (1) 5-5-06: 008
Property Reserve Inc

C_{12} Construction Parcel
Area: 0.011 Acres: (494 Sq. Ft.)
T.M.K.: (1) 5-5-13: 079
Property Reserve Inc

C_{13} Construction Parcel
Area: 0.009 Acres: (409 Sq. Ft.)
T.M.K.: (1) 5-5-13: 080
Ethel Makaaa, K. Lua, Kupele Kahinu

C_{14} Construction Parcel
Area: 0.010 Acres: (416 Sq. Ft.)
T.M.K.: (1) 5-5-13: 080
Property Reserve Inc

C_{15} Construction Parcel
Area: 0.025 Acres: (1,104 Sq. Ft.)
T.M.K.: (1) 5-5-13: 079
Property Reserve Inc

C_{16} Construction Parcel
Area: 0.285 Acres: (12,421 Sq. Ft.)
T.M.K.: (1) 5-5-13: 077
Property Reserve Inc

C_{17} Construction Parcel
Area: 0.015 Acres: (649 Sq. Ft.)
T.M.K.: (1) 5-5-13: 076
Property Reserve Inc

C_{18} Construction Parcel
Area: 0.002 Acres: (85 Sq. Ft.)
T.M.K.: (1) 5-5-13: 075
Benjamin D. Martin

C_{19} Construction Parcel
Area: 0.022 Acres: (951 Sq. Ft.)
T.M.K.: (1) 5-5-14: 001
Property Reserve Inc

1 Parcel 1 for Acquisition
Area: 0.003 Acres: (135 Sq. Ft.)
T.M.K.: (1) 5-5-11: 070
Jennifer McCarty

CONSTRUCTION PARCELS & EASEMENTS PLAN

Scale: 1"= 30'-0"

0 30 60 90
Scale: 1" = 30' Feet

ORIGINAL PLAN	SURVEY PLOTTED BY	DATE
	DRAWN BY	
	TRACED BY	
NOTE BOOK	DESIGNED BY	
	QUANTITIES BY	
No.	CHECKED BY	

MINGXUN DING
LICENSED PROFESSIONAL ENGINEER
NO. 9246-C
HAWAII U.S.A.

LICENSE EXPIRES 4/30/24

THIS WORK WAS PREPARED BY ME OR UNDER MY SUPERVISION

STATE OF HAWAII
DEPARTMENT OF TRANSPORTATION
HIGHWAYS DIVISION

CONSTRUCTION PARCELS AND EASEMENT PLAN
KAMEHAMEHA HIGHWAY
Laieloa Stream Bridge Replacement
Federal-Aid Project No. BR-083-1(58)

Scale: As Shown Date: September 2023

SHEET No. 1 OF 1 SHEETS

FED. ROAD DIST. NO.	STATE	FED. AID PROJ. NO.	FISCAL YEAR	SHEET NO.	TOTAL SHEETS
HAWAII	HAW.	BR-083-1(58)	2023	13	129

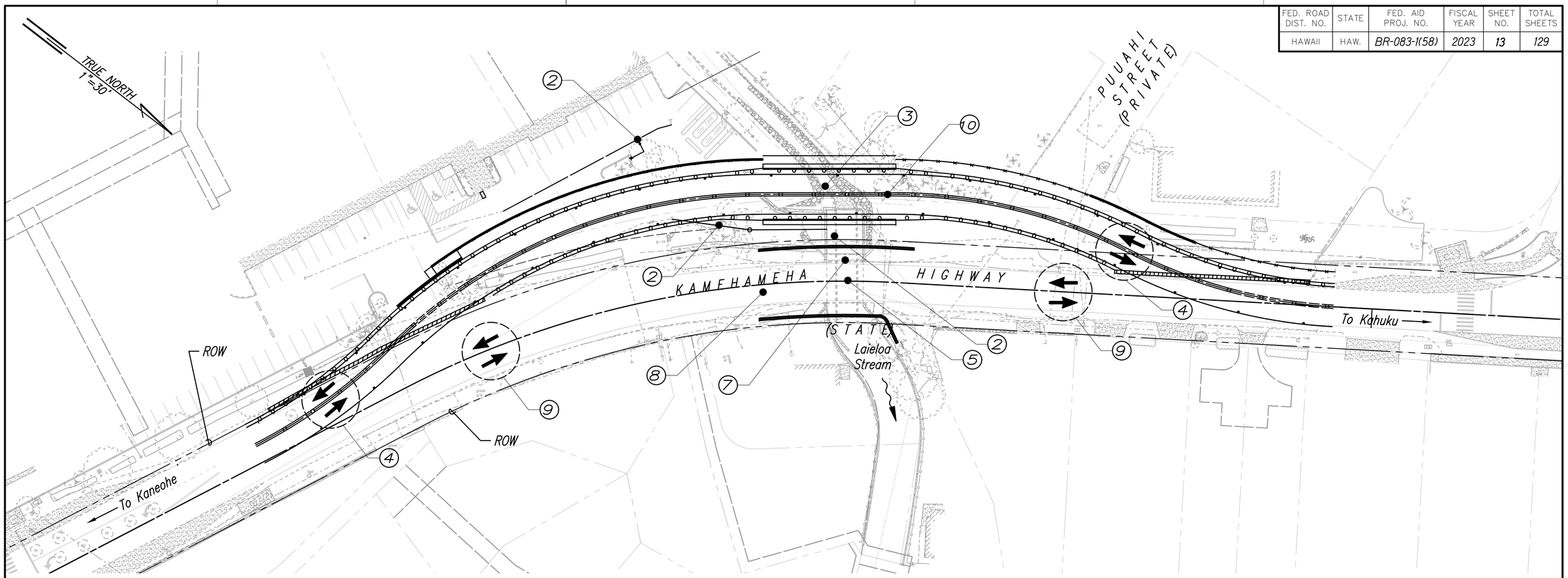

* Recommended phases only.

CONSTRUCTION PHASING

Scale: 1"= 30'-0"

1. Install BMPs.
2. Prepare Site for Diversion Road Construction.
   - See Sheet 15 for Demolition Details.
   - See Landscape Sheets for Tree Removal/Relocation Details.
   - See Sheet 16 for Shopping Center Main Driveway Plan.
   - See Sheet 23 for Parking Lot Details
   - See Sheet 24 for Drainline Realignment Details.
   - See Sheets 25-26 for Waterline and Fire Hydrant Realignment Details
3. Construct Diversion Bridge and Diversion Roadway.
   - See Structural Sheets for Diversion Bridge Details.
   - See Sheets 17 through 22 for Diversion Roadway Construction.
4. Divert Traffic to Diversion Road.
   - See Sheets 27-29 for Traffic Control Plan.
5. Demolish Existing Bridge.
   - See Sheet 14 for Bridge Construction Phasing.
6. Prepare Site for Final Bridge Construction
   - See Sheets 36-37 for Low Pressure Sewer Plan Details.
7. Construct Final Bridge
   - See Structural Sheets for Bridge Construction Phasing
8. Begin Final Roadway Pavement Reconstruction
   - See Sheets 30 through 35 for Final Roadway Construction
9. Reroute Traffic Back to Original Roadway
10. Demolish Diversion Bridge and Diversion Roadway
11. Restore Laie Shopping Center Parking Lot to Original Condition, See Sheets 40-41. Restore Private Properties to Original Condition or as shown on the plans, See Sheets 38-39.
12. Begin Landscape Revegetation
    - See Landscape Sheets for details
13. End Fed. Aid Project No. HS-BR-083-1(58)

0 30 60 90
Scale: 1" = 30' Feet

MINGXUN DING
LICENSED PROFESSIONAL ENGINEER
NO. 9246-C
HAWAII, U.S.A.

LICENSE EXPIRES 4/30/24

THIS WORK WAS PREPARED BY ME OR UNDER MY SUPERVISION

STATE OF HAWAII
DEPARTMENT OF TRANSPORTATION
HIGHWAYS DIVISION

CONSTRUCTION PHASING

KAMEHAMEHA HIGHWAY
Laieloa Stream Bridge Replacement
Federal-Aid Project No. BR-083-1(58)

Scale: As Shown Date: September 2023

SHEET No. 1 OF 1 SHEETS

ORIGINAL PLAN
NOTE BOOK No.
SURVEY PLOTTED BY
DRAWN BY
TRACED BY
DESIGNED BY
QUANTITIES BY
CHECKED BY
DATE

FED. ROAD DIST. NO.	STATE	FED. AID PROJ. NO.	FISCAL YEAR	SHEET NO.	TOTAL SHEETS
HAWAII	HAW.	BR-083-1(58)	2023	14	129

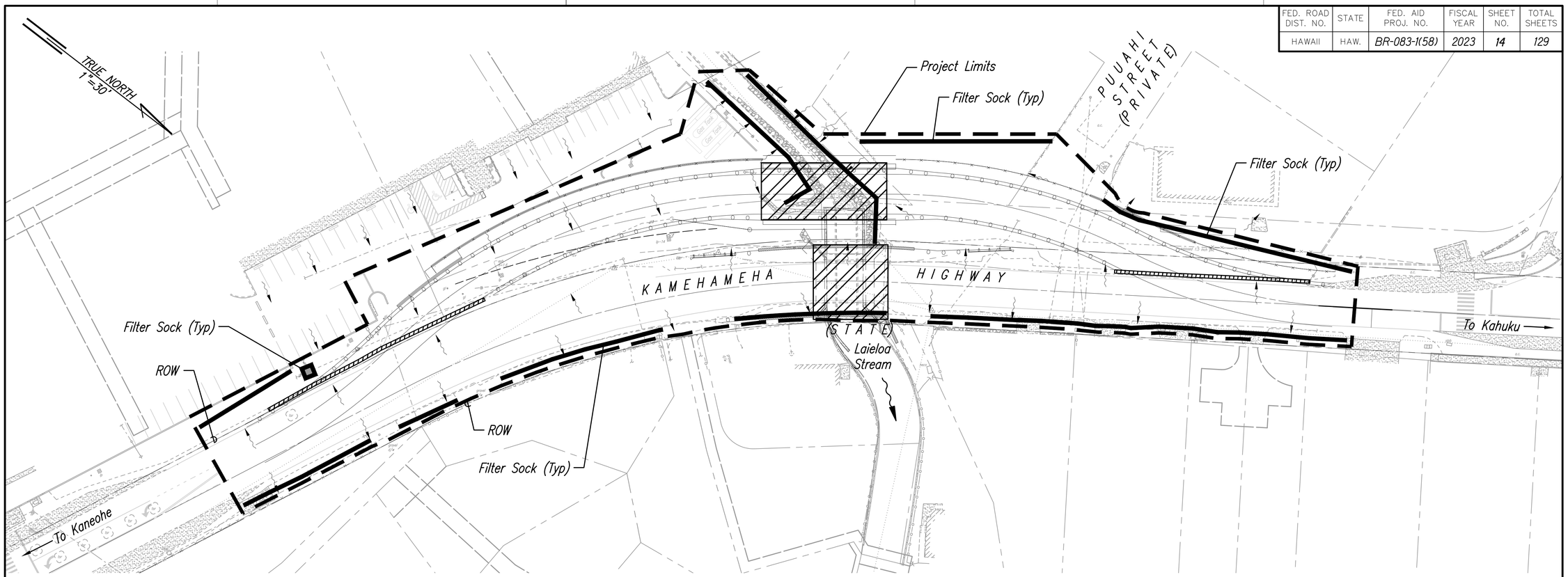

* Recommended phases only.

EROSION AND SEDIMENT CONTROL PLAN

Scale: 1"= 30'-0"

Legend

- Filter Sock
- Direction of Flow
- Project Area
- Debris Net

Note:
Sediment and erosion control bmp measures shown in the contract documents are minimum bmps requirements and do not constitute an acceptable and/or complete sediment and erosion control plan. The contractor shall incorporate additional bmps based upon their means and methods considering site conditions and construction sequence in accordance with the contract documents including applicable permit document requirements. Cost shall be included in pay item 209.0100, installation, maintenance, monitoring, and removal of bmp.

0 30 60 90
Scale: 1" = 30' Feet

MINGXUN DING
LICENSED PROFESSIONAL ENGINEER
NO. 9246-C
HAWAII, U.S.A.

LICENSE EXPIRES 4/30/24

THIS WORK WAS PREPARED BY ME OR UNDER MY SUPERVISION

STATE OF HAWAII
DEPARTMENT OF TRANSPORTATION
HIGHWAYS DIVISION

EROSION AND SEDIMENT CONTROL PLAN
KAMEHAMEHA HIGHWAY
Laieloa Stream Bridge Replacement
Federal-Aid Project No. BR-083-1(58)

Scale: As Shown Date: September 2023

SHEET No. 1 OF 1 SHEETS

ORIGINAL PLAN
NOTE BOOK No.
SURVEY PLOTTED BY
DRAWN BY
TRACED BY
DESIGNED BY
QUANTITIES BY
CHECKED BY
DATE

FED. ROAD DIST. NO.	STATE	FED. AID PROJ. NO.	FISCAL YEAR	SHEET NO.	TOTAL SHEETS
HAWAII	HAW.	BR-083-1(58)	2023	15	129

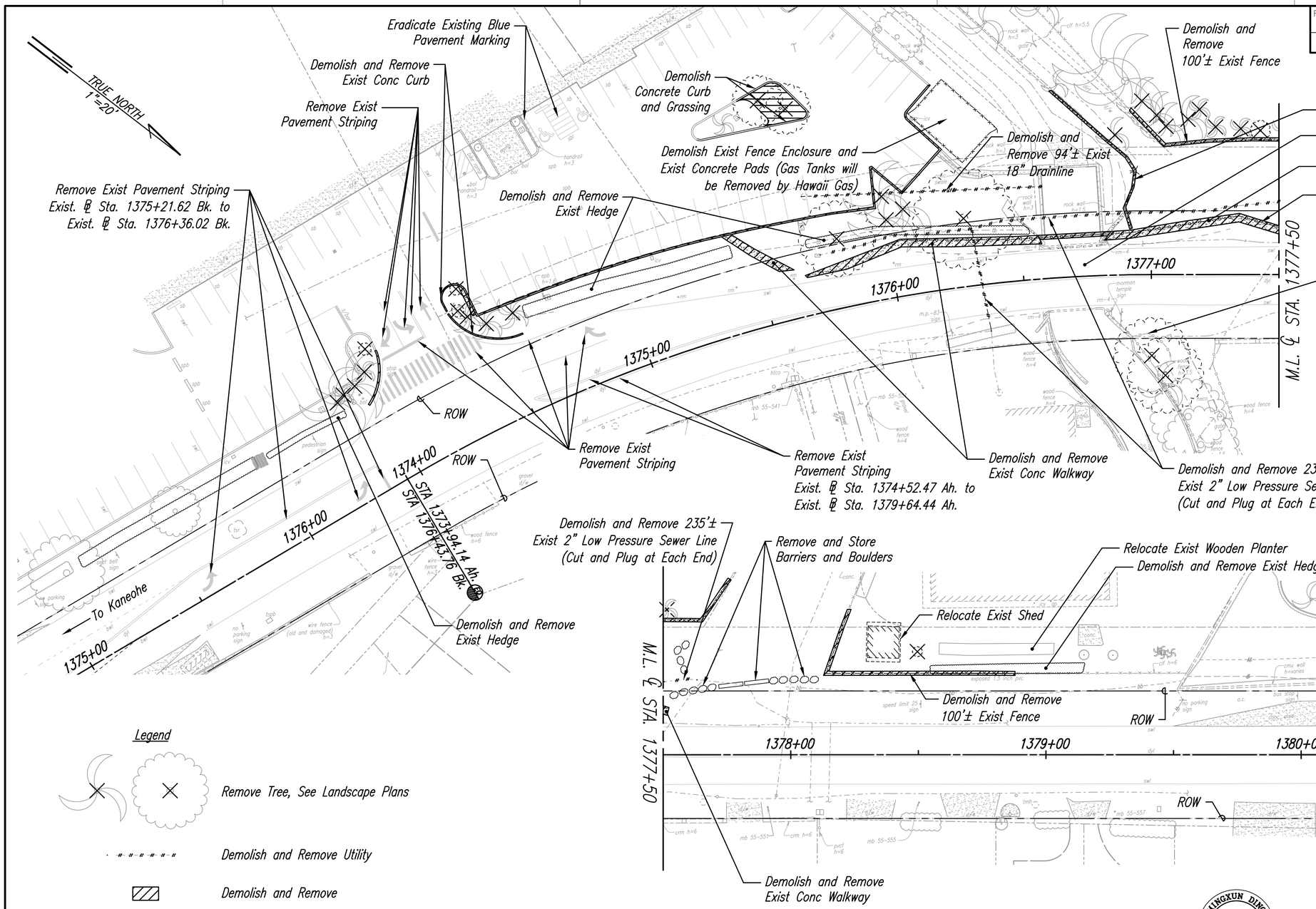

NOTES:

1. Utility poles and lines to be relocated are not shown on this plan, see Electrical Demolition Plans for additional information.

Legend

Remove Tree, See Landscape Plans

Demolish and Remove Utility

Demolish and Remove

ORIGINAL PLAN | SURVEY PLOTTED BY ____ DATE ____ | DRAWN BY ____ | TRACED BY ____ | DESIGNED BY ____ | QUANTITIES BY ____ | CHECKED BY ____ | NOTE BOOK No. ____

DEMOLITION PLAN

Scale: 1"= 20'-0"

0 20 40 60
Scale: 1" = 20' Feet

MINGXUN DING
LICENSED PROFESSIONAL ENGINEER
NO. 9246-C
HAWAII, U.S.A.

LICENSE EXPIRES 4/30/24

THIS WORK WAS PREPARED BY ME OR UNDER MY SUPERVISION

STATE OF HAWAII
DEPARTMENT OF TRANSPORTATION
HIGHWAYS DIVISION

DEMOLITION PLAN

KAMEHAMEHA HIGHWAY
Laieloa Stream Bridge Replacement
Federal-Aid Project No. BR-083-1(58)

Scale: As Shown Date: September 2023

SHEET No. 1 OF 1 SHEETS

FED. ROAD DIST. NO.	STATE	FED. AID PROJ. NO.	FISCAL YEAR	SHEET NO.	TOTAL SHEETS
HAWAII	HAW.	BR-083-1(58)	2023	16	129

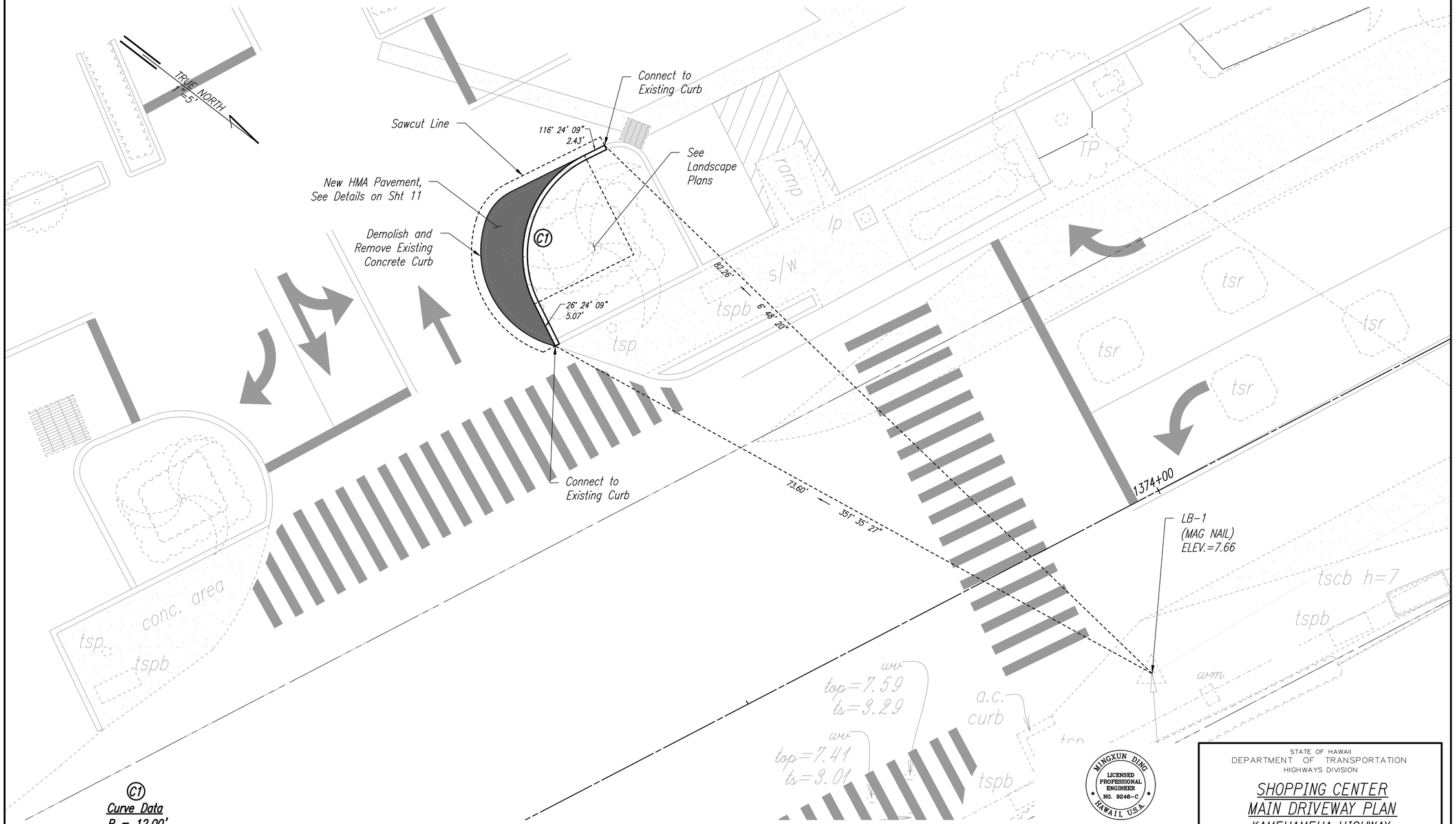

C1

Curve Data

R = 12.00'
Δ = 90°00'
T = 12.00'
C = 16.97'
L = 18.85'

SHOPPING CENTER MAIN DRIVEWAY PLAN

Scale: 1"= 5'-0"

ORIGINAL PLAN		DATE
	SURVEY PLOTTED BY	
	DRAWN BY	"
	TRACED BY	"
NOTE BOOK	DESIGNED BY	"
	QUANTITIES BY	"
No.	CHECKED BY	"

MINGXUN DING
LICENSED PROFESSIONAL ENGINEER
NO. 9246-C
HAWAII, U.S.A.

LICENSE EXPIRES 4/30/24

THIS WORK WAS PREPARED BY ME OR UNDER MY SUPERVISION

STATE OF HAWAII
DEPARTMENT OF TRANSPORTATION
HIGHWAYS DIVISION

SHOPPING CENTER
MAIN DRIVEWAY PLAN
KAMEHAMEHA HIGHWAY
Laieloa Stream Bridge Replacement
Federal-Aid Project No. BR-083-1(58)

Scale: As Shown Date: September 2023

SHEET No. 1 OF 1 SHEETS

FED. ROAD DIST. NO.	STATE	FED. AID PROJ. NO.	FISCAL YEAR	SHEET NO.	TOTAL SHEETS
HAWAII	HAW.	BR-083-1(58)	2023	17	129

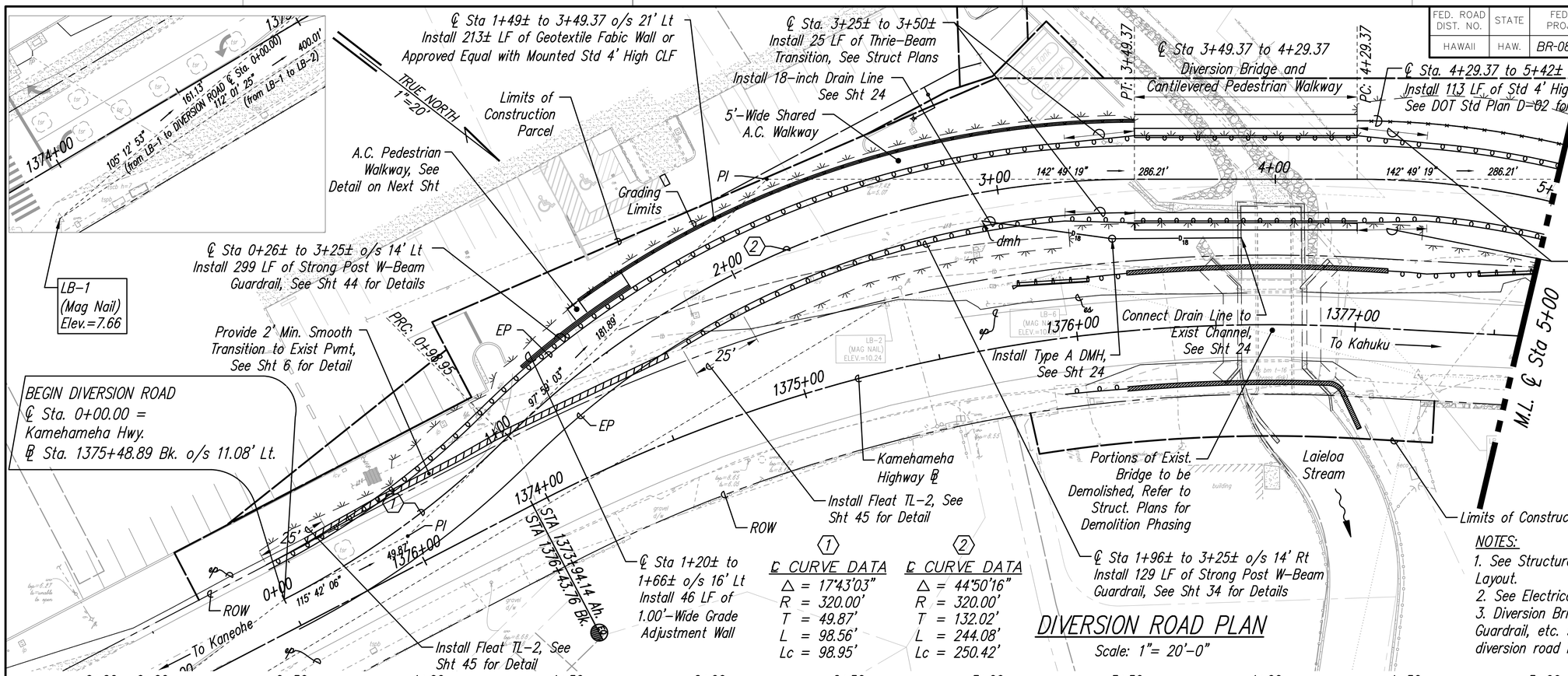

① ℄ CURVE DATA	② ℄ CURVE DATA
△ = 17°43'03"	△ = 44°50'16"
R = 320.00'	R = 320.00'
T = 49.87'	T = 132.02'
L = 98.56'	L = 244.08'
Lc = 98.95'	Lc = 250.42'

DIVERSION ROAD PLAN

Scale: 1"= 20'-0"

NOTES:

1. See Structural Plans for Bridge/Poles Layout.
2. See Electrical Plans for Utility Layout.
3. Diversion Bridge, Gabion Walls, Fence, Guardrail, etc. shall be removed when diversion road is demolished.

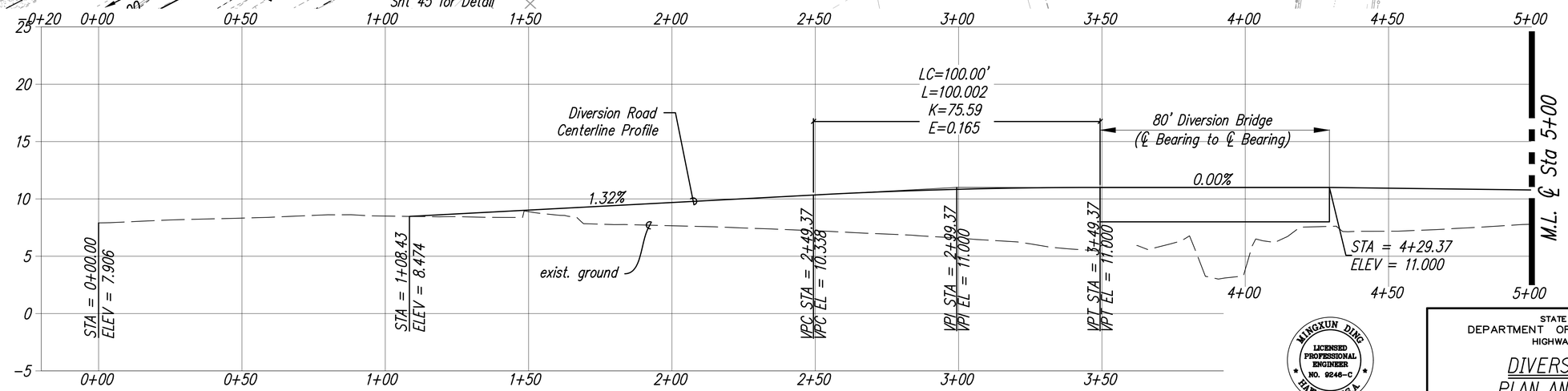

DIVERSION ROAD PROFILE

Horiz. Scale: 1"= 20'
Vert. Scale: 1"= 5'

0 10 20 30
Scale: 1" = 10' Feet

MINGXUN DING
LICENSED PROFESSIONAL ENGINEER
NO. 9246-C
HAWAII, U.S.A.

LICENSE EXPIRES 4/30/24

THIS WORK WAS PREPARED BY ME OR UNDER MY SUPERVISION

STATE OF HAWAII
DEPARTMENT OF TRANSPORTATION
HIGHWAYS DIVISION

DIVERSION ROAD
PLAN AND PROFILE
KAMEHAMEHA HIGHWAY
Laieloa Stream Bridge Replacement
Federal-Aid Project No. BR-083-1(58)

Scale: As Shown Date: September 2023

SHEET No. 1 OF 2 SHEETS

ORIGINAL PLAN
NOTE BOOK No.
SURVEY PLOTTED BY
DRAWN BY
TRACED BY
DESIGNED BY
QUANTITIES BY
CHECKED BY
DATE

FED. ROAD DIST. NO.	STATE	FED. AID PROJ. NO.	FISCAL YEAR	SHEET NO.	TOTAL SHEETS
HAWAII	HAW.	BR-083-1(58)	2023	18	129

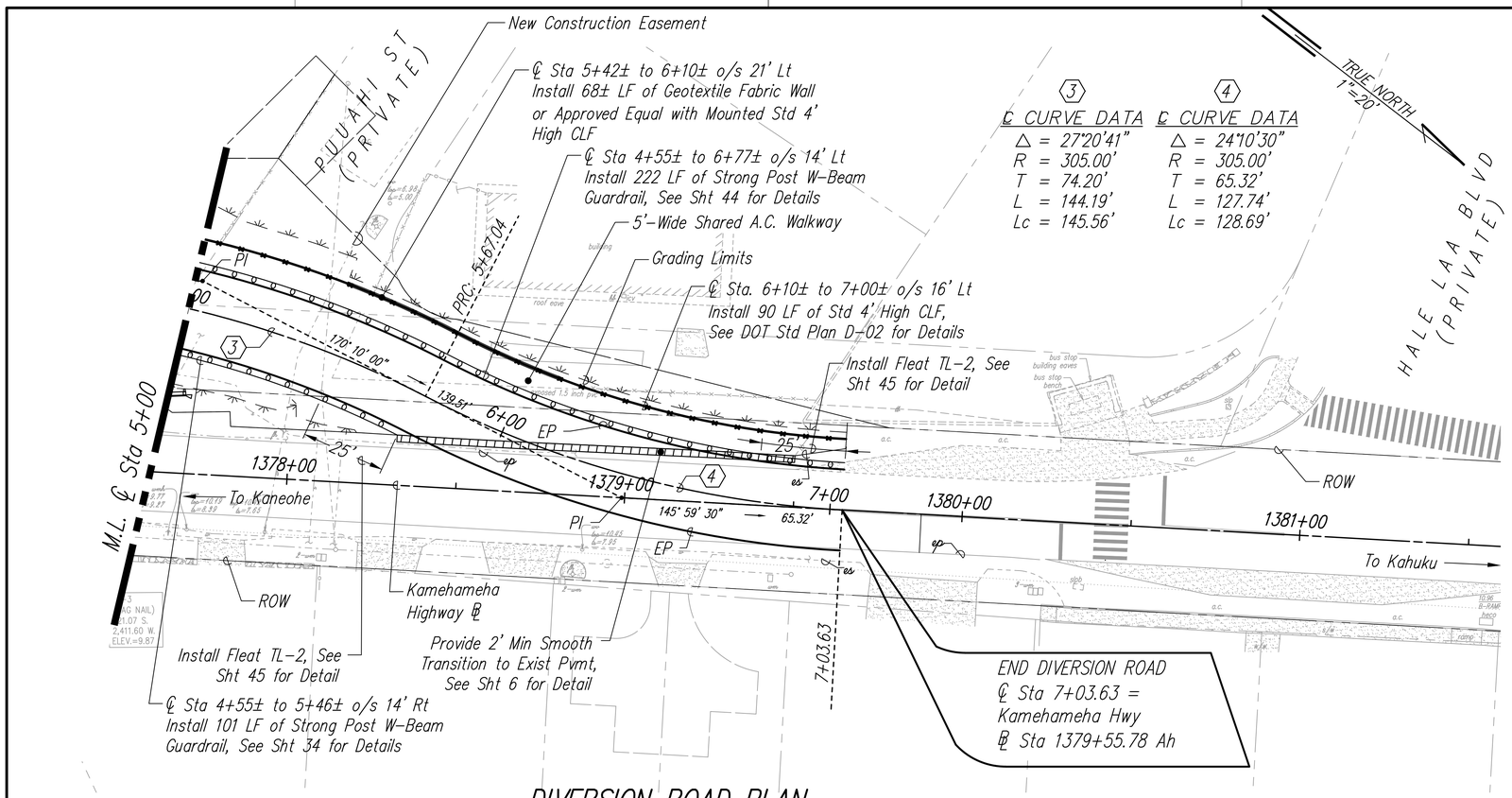

3 ℄ CURVE DATA	4 ℄ CURVE DATA
Δ = 27°20'41"	Δ = 24°10'30"
R = 305.00'	R = 305.00'
T = 74.20'	T = 65.32'
L = 144.19'	L = 127.74'
Lc = 145.56'	Lc = 128.69'

DIVERSION ROAD PLAN

Scale: 1"= 20'-0"

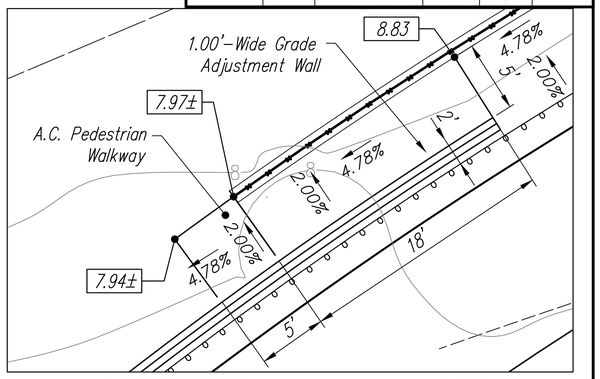

A.C. PEDESTRIAN WALKWAY DETAIL

Scale: 1"=5'-0"

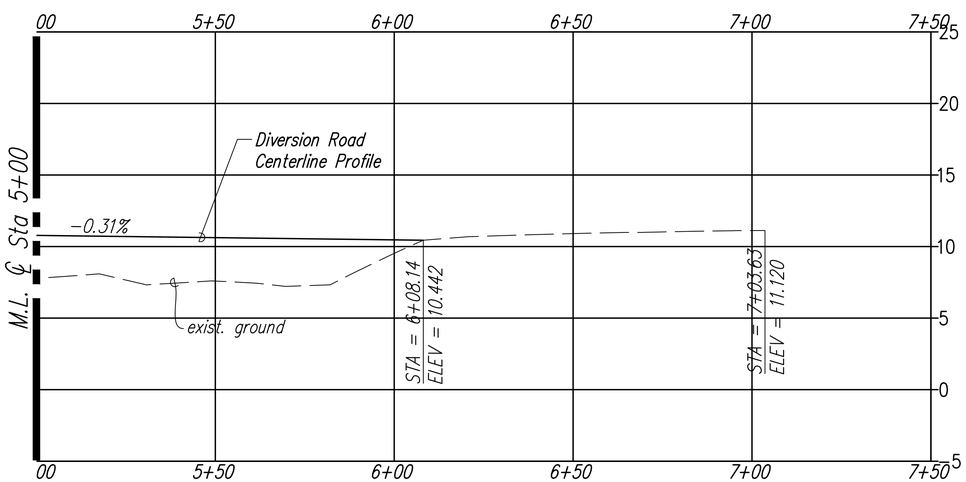

DIVERSION ROAD PROFILE

Horiz. Scale: 1"= 20'
Vert. Scale: 1"= 5'

ORIGINAL PLAN
NOTE BOOK No.
SURVEY PLOTTED BY
DRAWN BY
TRACED BY
DESIGNED BY
QUANTITIES BY
CHECKED BY
DATE

MINGXUN DING
LICENSED PROFESSIONAL ENGINEER
NO. 9246-C
HAWAII, U.S.A.

LICENSE EXPIRES 4/30/24

THIS WORK WAS PREPARED BY ME OR UNDER MY SUPERVISION

STATE OF HAWAII
DEPARTMENT OF TRANSPORTATION
HIGHWAYS DIVISION

DIVERSION ROAD
PLAN AND PROFILE
KAMEHAMEHA HIGHWAY
Laieloa Stream Bridge Replacement
Federal-Aid Project No. BR-083-1(58)

Scale: As Shown Date: September 2023

SHEET No. 2 OF 2 SHEETS

FED. ROAD DIST. NO.	STATE	FED. AID PROJ. NO.	FISCAL YEAR	SHEET NO.	TOTAL SHEETS
HAWAII	HAW.	BR-083-1(58)	2023	19	129

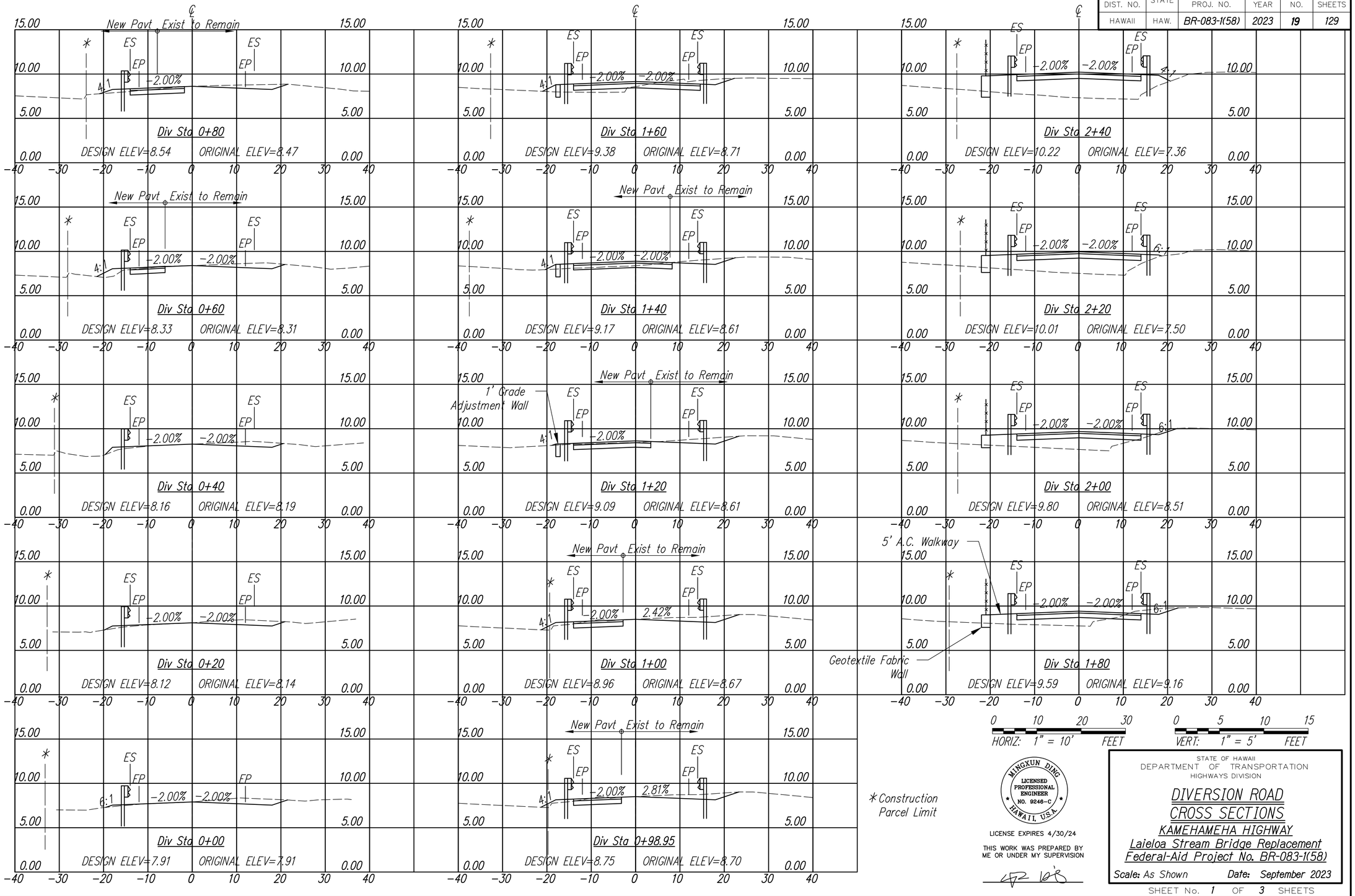

*Construction Parcel Limit

MINGXUN DING
LICENSED PROFESSIONAL ENGINEER
NO. 9246-C
HAWAII, U.S.A.

LICENSE EXPIRES 4/30/24

THIS WORK WAS PREPARED BY ME OR UNDER MY SUPERVISION

STATE OF HAWAII
DEPARTMENT OF TRANSPORTATION
HIGHWAYS DIVISION

DIVERSION ROAD CROSS SECTIONS

KAMEHAMEHA HIGHWAY

Laieloa Stream Bridge Replacement
Federal-Aid Project No. BR-083-1(58)

Scale: As Shown Date: September 2023

SHEET No. 1 OF 3 SHEETS

ORIGINAL PLAN | NOTE BOOK No. | SURVEY PLOTTED BY | DRAWN BY | TRACED BY | DESIGNED BY | QUANTITIES BY | CHECKED BY | DATE

FED. ROAD DIST. NO.	STATE	FED. AID PROJ. NO.	FISCAL YEAR	SHEET NO.	TOTAL SHEETS
HAWAII	HAW.	BR-083-1(58)	2023	20	129

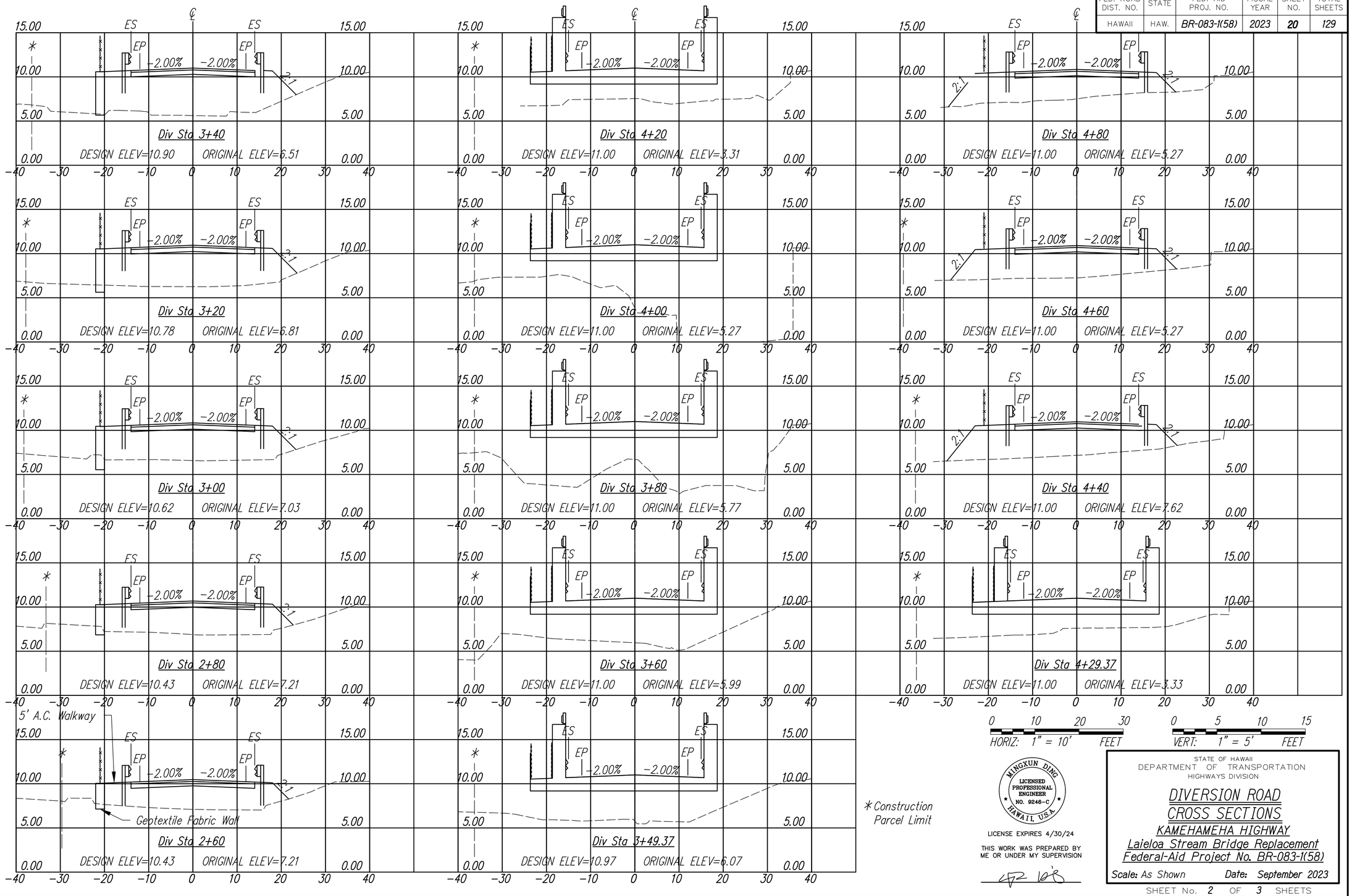

HORIZ: 1" = 10' FEET

VERT: 1" = 5' FEET

* Construction Parcel Limit

MINGXUN DING
LICENSED PROFESSIONAL ENGINEER
NO. 9246-C
HAWAII, U.S.A.

LICENSE EXPIRES 4/30/24

THIS WORK WAS PREPARED BY ME OR UNDER MY SUPERVISION

STATE OF HAWAII
DEPARTMENT OF TRANSPORTATION
HIGHWAYS DIVISION

DIVERSION ROAD CROSS SECTIONS

KAMEHAMEHA HIGHWAY

Laieloa Stream Bridge Replacement Federal-Aid Project No. BR-083-1(58)

Scale: As Shown Date: September 2023

SHEET No. 2 OF 3 SHEETS

ORIGINAL PLAN | SURVEY PLOTTED BY | SURVEY DRAWN BY | TRACED BY | DESIGNED BY | QUANTITIES BY | CHECKED BY | DATE | NOTE BOOK No.

FED. ROAD DIST. NO.	STATE	FED. AID PROJ. NO.	FISCAL YEAR	SHEET NO.	TOTAL SHEETS
HAWAII	HAW.	BR-083-1(58)	2023	21	129

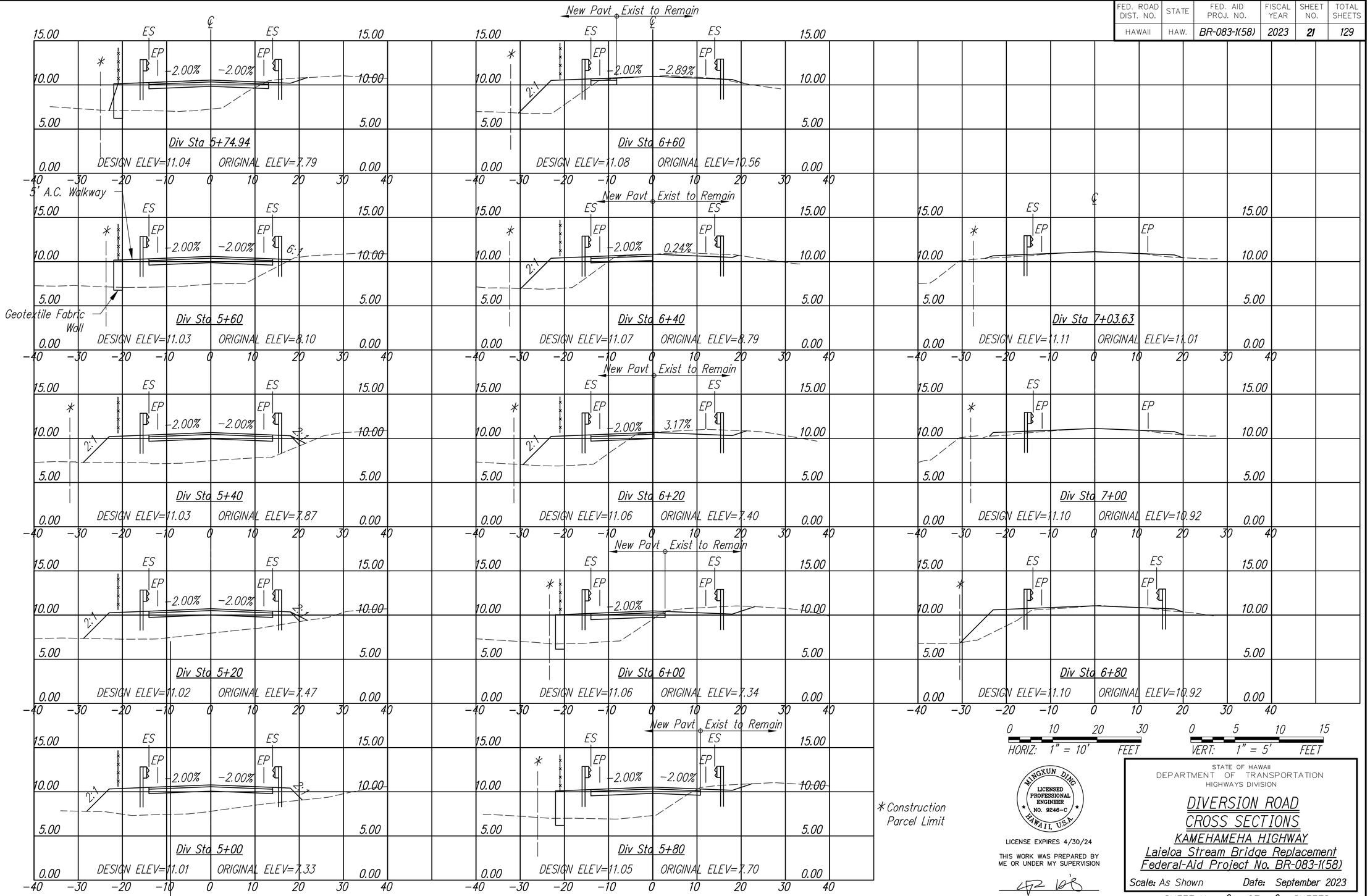

*Construction Parcel Limit

MINGXUN DING
LICENSED PROFESSIONAL ENGINEER
NO. 9246-C
HAWAII U.S.A.

LICENSE EXPIRES 4/30/24

THIS WORK WAS PREPARED BY ME OR UNDER MY SUPERVISION

STATE OF HAWAII
DEPARTMENT OF TRANSPORTATION
HIGHWAYS DIVISION

DIVERSION ROAD CROSS SECTIONS

KAMEHAMEHA HIGHWAY
Laieloa Stream Bridge Replacement
Federal-Aid Project No. BR-083-1(58)

Scale: As Shown Date: September 2023

SHEET No. 3 OF 3 SHEETS

ORIGINAL PLAN
NOTE BOOK No.
SURVEY PLOTTED BY
DRAWN BY
TRACED BY
DESIGNED BY
QUANTITIES BY
CHECKED BY
DATE

FED. ROAD DIST. NO.	STATE	FED. AID PROJ. NO.	FISCAL YEAR	SHEET NO.	TOTAL SHEETS
HAWAII	HAW.	BR-083-1(58)	2023	22	129

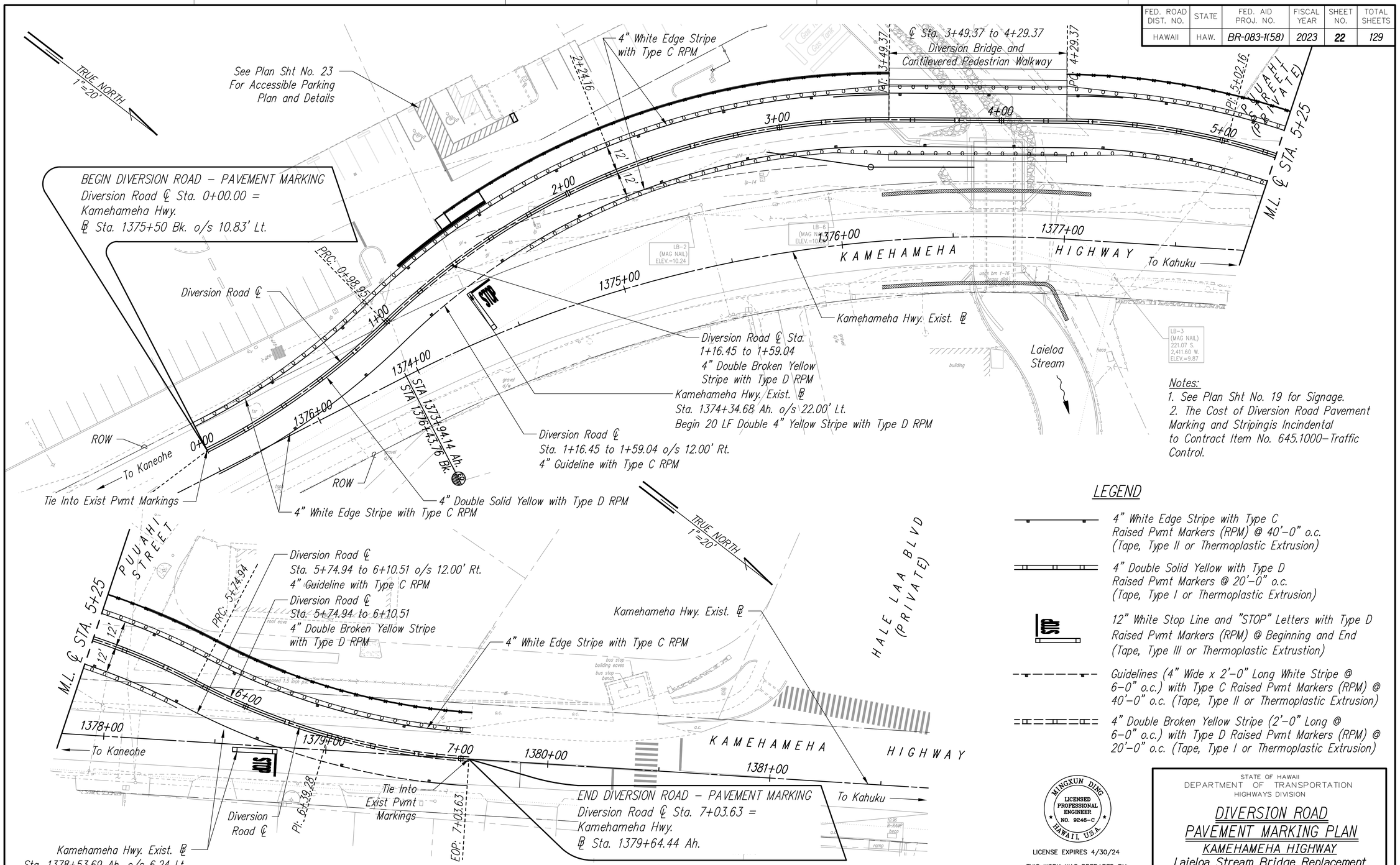

Notes:
1. See Plan Sht No. 19 for Signage.
2. The Cost of Diversion Road Pavement Marking and Stripingis Incindental to Contract Item No. 645.1000–Traffic Control.

LEGEND

- 4" White Edge Stripe with Type C Raised Pvmt Markers (RPM) @ 40'–0" o.c. (Tape, Type II or Thermoplastic Extrusion)
- 4" Double Solid Yellow with Type D Raised Pvmt Markers @ 20'–0" o.c. (Tape, Type I or Thermoplastic Extrusion)
- 12" White Stop Line and "STOP" Letters with Type D Raised Pvmt Markers (RPM) @ Beginning and End (Tape, Type III or Thermoplastic Extrustion)
- Guidelines (4" Wide x 2'–0" Long White Stripe @ 6–0" o.c.) with Type C Raised Pvmt Markers (RPM) @ 40'–0" o.c. (Tape, Type II or Thermoplastic Extrusion)
- 4" Double Broken Yellow Stripe (2'–0" Long @ 6–0" o.c.) with Type D Raised Pvmt Markers (RPM) @ 20'–0" o.c. (Tape, Type I or Thermoplastic Extrusion)

DIVERSION ROAD PAVEMENT MARKING PLAN

SCALE: 1"= 20'–0"

ORIGINAL PLAN	SURVEY PLOTTED BY	DATE
	DRAWN BY	"
	TRACED BY	"
NOTE BOOK	DESIGNED BY	"
	QUANTITIES BY	"
No.	CHECKED BY	"

MINGXUN DING
LICENSED PROFESSIONAL ENGINEER
NO. 9246-C
HAWAII, U.S.A.

LICENSE EXPIRES 4/30/24

THIS WORK WAS PREPARED BY ME OR UNDER MY SUPERVISION

STATE OF HAWAII
DEPARTMENT OF TRANSPORTATION
HIGHWAYS DIVISION

DIVERSION ROAD
PAVEMENT MARKING PLAN
KAMEHAMEHA HIGHWAY
Laieloa Stream Bridge Replacement
Federal-Aid Project No. BR-083-1(58)

Scale: As Shown Date: September 2023

SHEET No. 1 OF 1 SHEETS

FED. ROAD DIST. NO.	STATE	FED. AID PROJ. NO.	FISCAL YEAR	SHEET NO.	TOTAL SHEETS
HAWAII	HAW.	BR-083-1(58)	2023	23	129

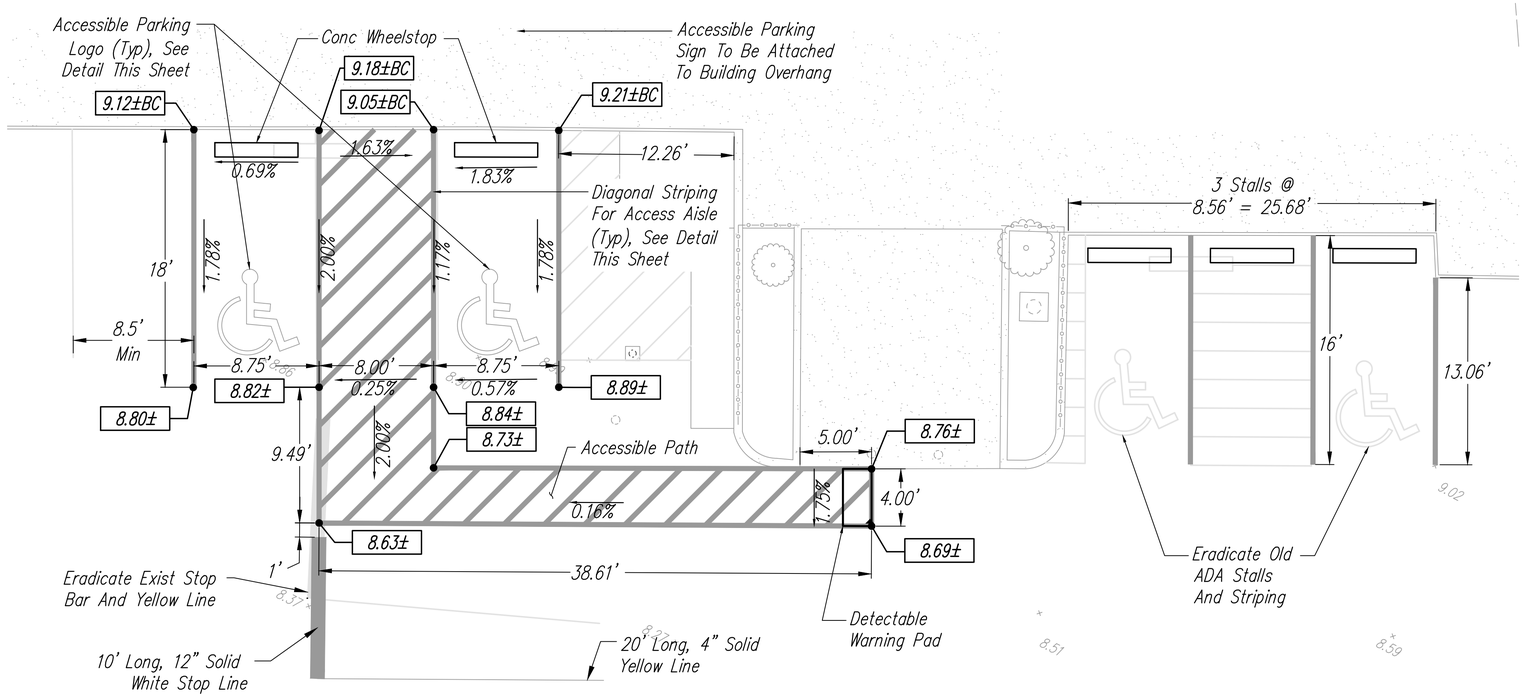

ACCESSIBILITY PLAN

Scale: 1"= 5'-0"

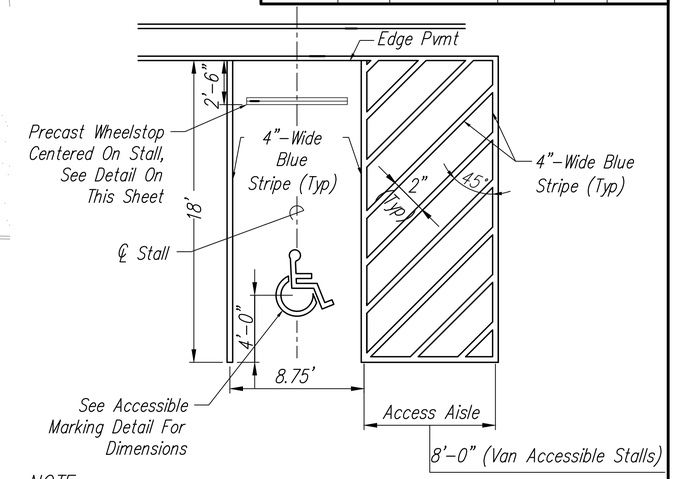

NOTE:
"No Parking-Access Aisle" sign assembly required only for conditions where 8'-0"-wide access aisles are present.

ACCESSIBILITY PARKING STALL

NOT TO SCALE

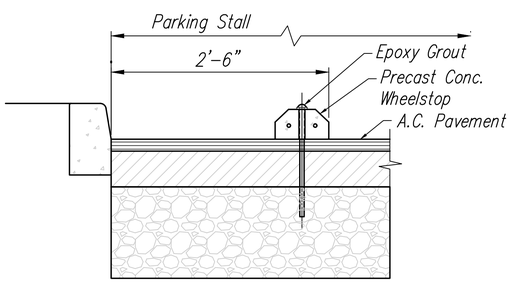

WHEELSTOP LOCATION

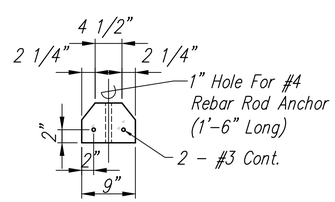

SECTION

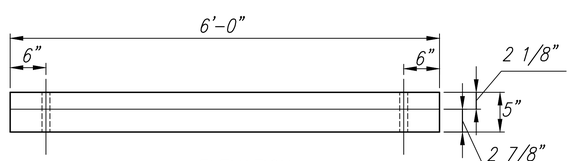

ELEVATION

PRECAST WHEELSTOP DETAIL

NOT TO SCALE

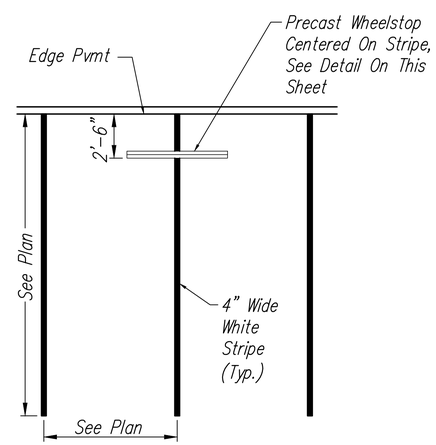

TYPICAL PARKING STALL DETAIL

NOT TO SCALE

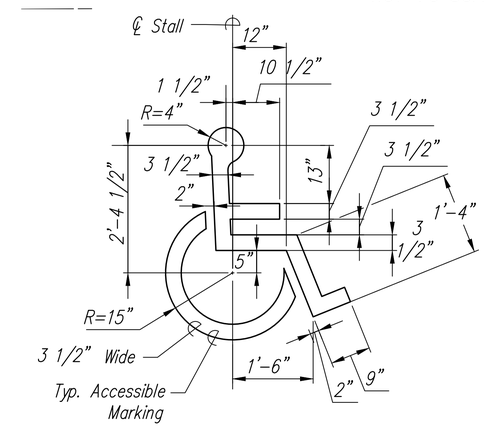

ACCESSIBLE MARKING DETAIL

NOT TO SCALE

MINGXUN DING
LICENSED PROFESSIONAL ENGINEER
NO. 9246-C
HAWAII, U.S.A.

LICENSE EXPIRES 4/30/24

THIS WORK WAS PREPARED BY ME OR UNDER MY SUPERVISION

STATE OF HAWAII
DEPARTMENT OF TRANSPORTATION
HIGHWAYS DIVISION

ACCESSIBLE PARKING PLAN AND DETAILS

KAMEHAMEHA HIGHWAY
Laieloa Stream Bridge Replacement
Federal-Aid Project No. BR-083-1(58)

Scale: As Shown Date: September 2023

SHEET No. 1 OF 1 SHEETS

ORIGINAL PLAN	SURVEY PLOTTED BY	DATE
	DRAWN BY	
	TRACED BY	
NOTE BOOK	DESIGNED BY	
	QUANTITIES BY	
No.	CHECKED BY	

FED. ROAD DIST. NO.	STATE	FED. AID PROJ. NO.	FISCAL YEAR	SHEET NO.	TOTAL SHEETS
HAWAII	HAW.	BR-083-1(58)	2023	24	129

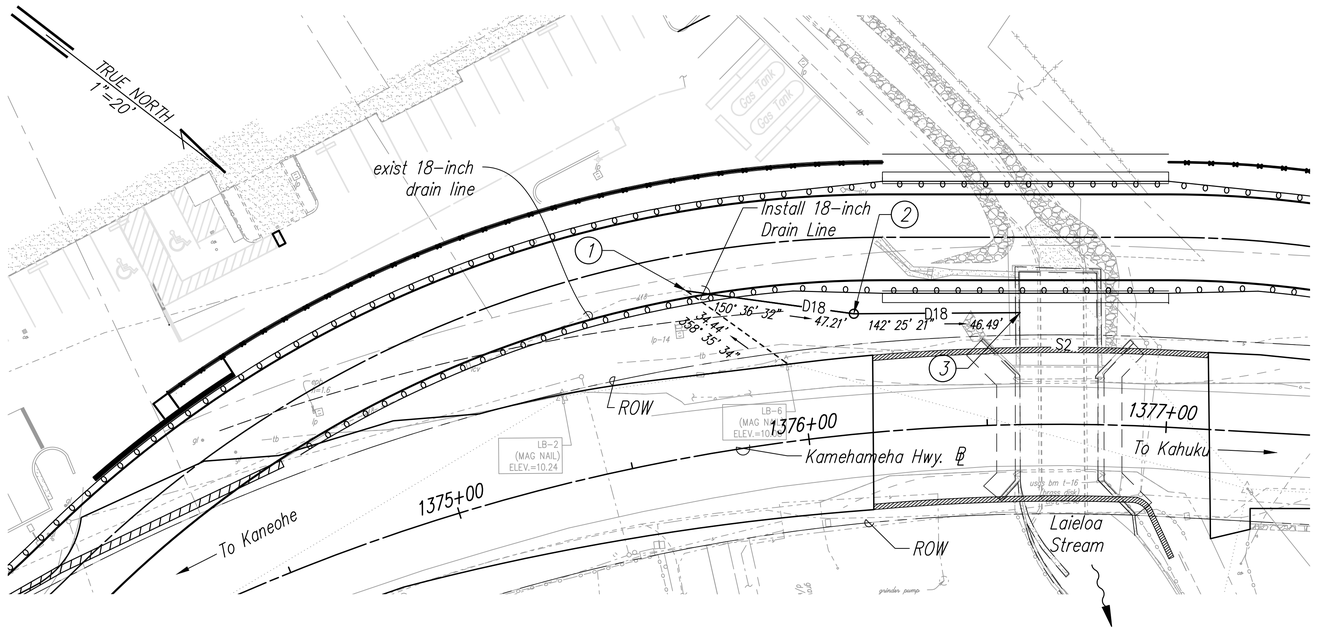

1 DL Sta 0+00
Kamehameha Hwy. ℄ Sta 1375+73.14 o/s 46' Lt
Begin New 18-inch Drain Line
Raise Existing DMH to Diversion Road Finish Grade
Drop Existing DMH to Finish Grade after Removal of Diversion Road

2 DL Sta 0+47.21
Kamehameha Hwy. ℄ Sta 1376+15.74 o/s 33.5' Lt
Install Type A SDMH
See DOT Standard Plan H-03

3 DL Sta 0+93.69
Kamehameha Hwy. ℄ Sta 1376+59.70 o/s 31.3' Lt
Connect to Exist Channel

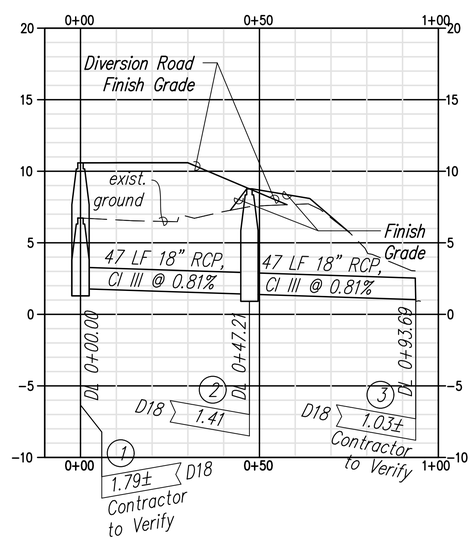

18-INCH DRAIN LINE PLAN & PROFILE

Horiz. Scale: 1"= 20'
Vert. Scale: 1"= 5'

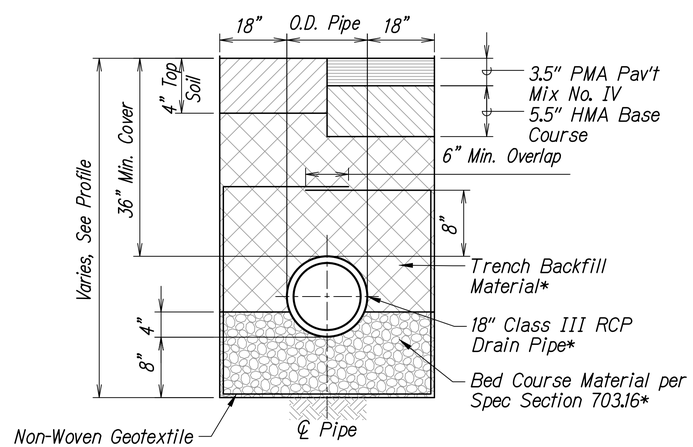

Drain Trench Detail

Not to Scale

*Drain Trench Detail Notes:

1. Trench backfill material and topsoil shall be paid for under contract Item No. 206.0100 - Excavation and Backfill for Drainage Facilities.
2. Bed course material shall be paid for under contract Item No. 603.0100 - Bed Course Material for Culvert.
3. 18-inch RCP shall be paid for under contract Item No. 603.0200 - 18-Inch Reinforced Concrete Pipe, Class III.

ORIGINAL PLAN	SURVEY PLOTTED BY	DATE
	DRAWN BY	
	TRACED BY	
NOTE BOOK	DESIGNED BY	
No.	QUANTITIES BY	
	CHECKED BY	

MINGXUN DING
LICENSED PROFESSIONAL ENGINEER
NO. 9246-C
HAWAII, U.S.A.

LICENSE EXPIRES 4/30/24

THIS WORK WAS PREPARED BY ME OR UNDER MY SUPERVISION

STATE OF HAWAII
DEPARTMENT OF TRANSPORTATION
HIGHWAYS DIVISION

DRAINAGE PLAN AND PROFILE
KAMEHAMEHA HIGHWAY
Laieloa Stream Bridge Replacement
Federal-Aid Project No. BR-083-1(58)

Scale: As Shown Date: September 2023

SHEET No. 1 OF 1 SHEETS

FED. ROAD DIST. NO.	STATE	FED. AID PROJ. NO.	FISCAL YEAR	SHEET NO.	TOTAL SHEETS
HAWAII	HAW.	BR-083-1(58)	2023	25	129

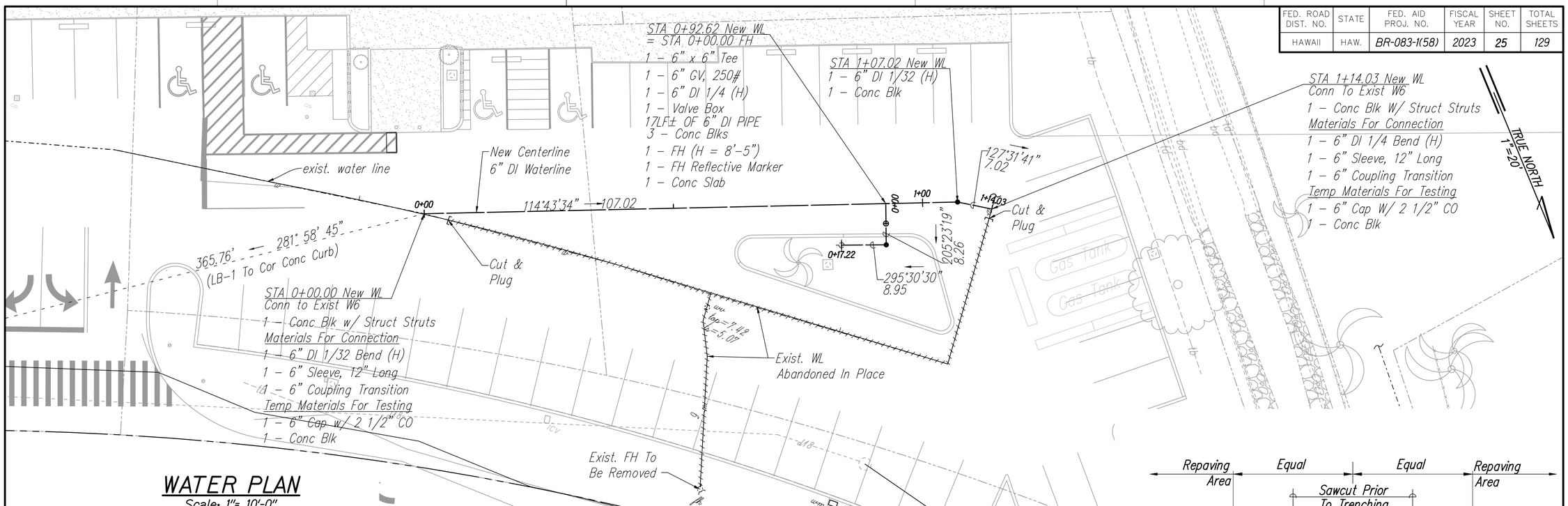

WATER PLAN

Scale: 1"= 10'-0"

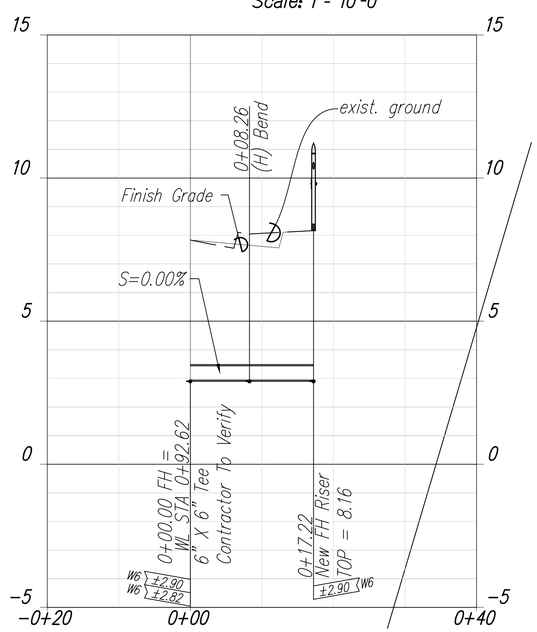

FH PROFILE

Horiz. Scale: 1"= 10'
Vert. Scale: 1"= 5'

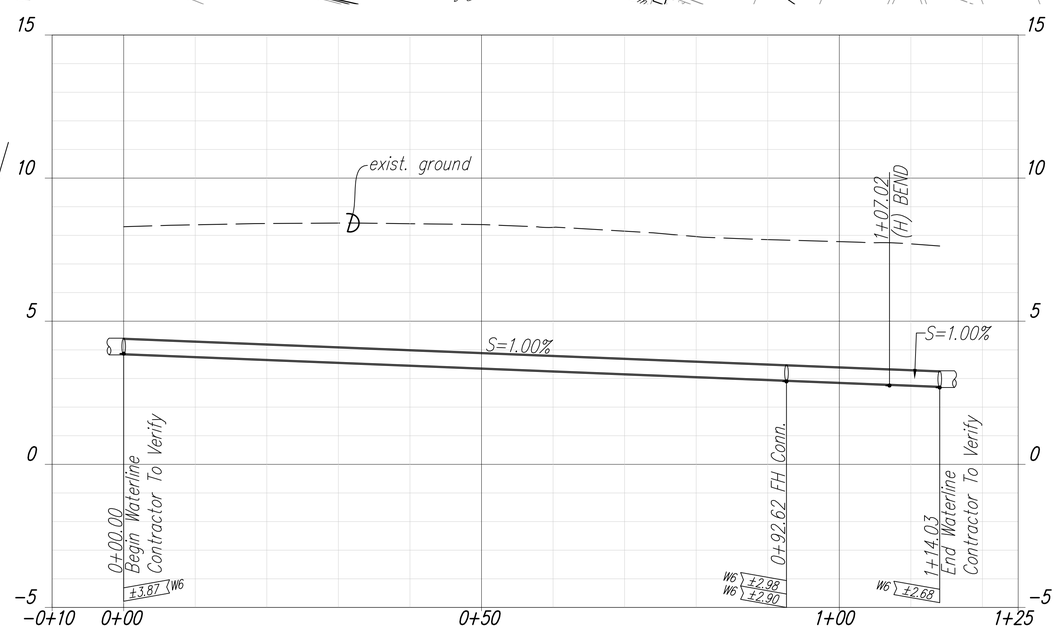

WATERLINE PROFILE

Horiz. Scale: 1"= 10'
Vert. Scale: 1"= 5'

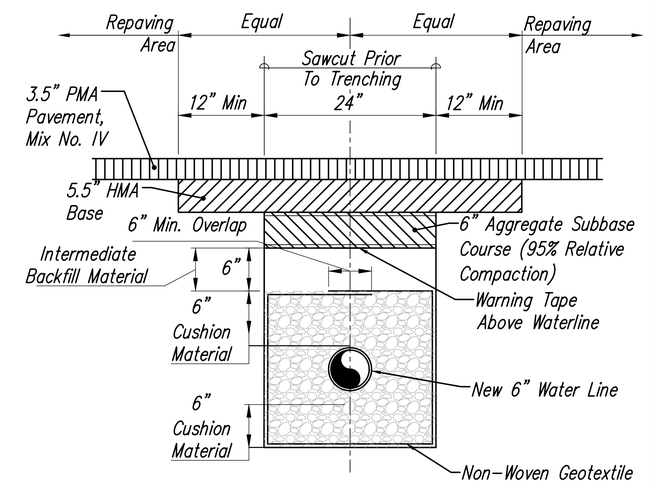

Typical Pavement Restoration

Scale: Not To Scale

ORIGINAL PLAN	SURVEY PLOTTED BY	DATE
	DRAWN BY	
	TRACED BY	
NOTE BOOK	DESIGNED BY	
	QUANTITIES BY	
No.	CHECKED BY	

MINGXUN DING
LICENSED PROFESSIONAL ENGINEER
NO. 9246-C
HAWAII, U.S.A.

LICENSE EXPIRES 4/30/24

THIS WORK WAS PREPARED BY ME OR UNDER MY SUPERVISION

STATE OF HAWAII
DEPARTMENT OF TRANSPORTATION
HIGHWAYS DIVISION

WATER PLAN AND PROFILE

KAMEHAMEHA HIGHWAY
Laieloa Stream Bridge Replacement
Federal-Aid Project No. BR-083-1(58)

Scale: As Shown Date: September 2023

SHEET No. 1 OF 1 SHEETS

FED. ROAD DIST. NO.	STATE	FED. AID PROJ. NO.	FISCAL YEAR	SHEET NO.	TOTAL SHEETS
HAWAII	HAW.	BR-083-1(58)	2023	26	129

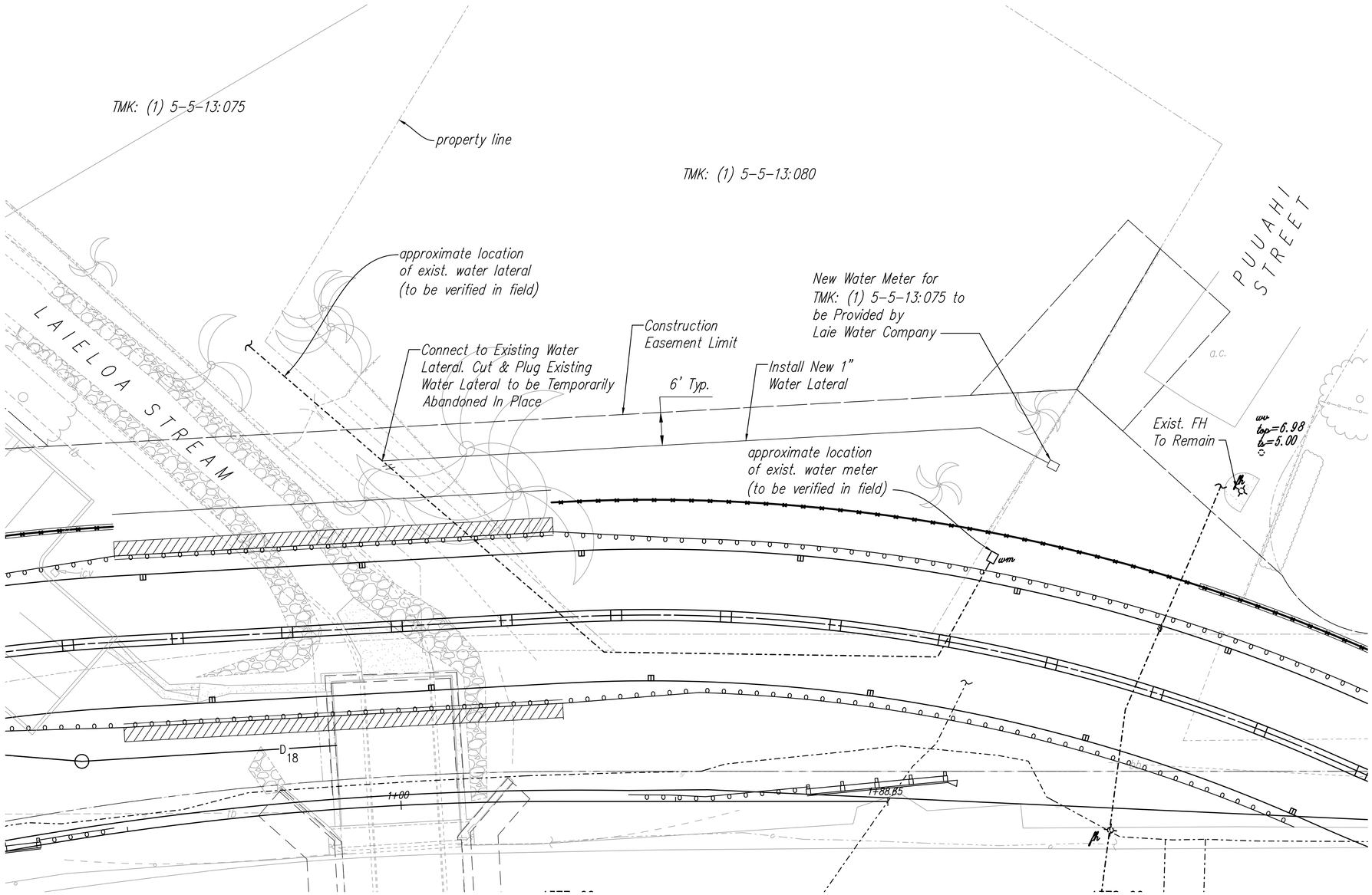

WATER LATERAL RELOCATION PLAN

Scale: 1"= 10'-0"

SURVEY PLOTTED BY	DATE
DRAWN BY	
TRACED BY	
DESIGNED BY	
QUANTITIES BY	
CHECKED BY	
ORIGINAL PLAN	
NOTE BOOK No.	

MINGXUN DING
LICENSED PROFESSIONAL ENGINEER
NO. 9246-C
HAWAII U.S.A.

LICENSE EXPIRES 4/30/24

THIS WORK WAS PREPARED BY ME OR UNDER MY SUPERVISION

STATE OF HAWAII
DEPARTMENT OF TRANSPORTATION
HIGHWAYS DIVISION

WATER LATERAL RELOCATION PLAN

KAMEHAMEHA HIGHWAY
Laieloa Stream Bridge Replacement
Federal-Aid Project No. BR-083-1(58)

Scale: As Shown Date: September 2023

SHEET No. 1 OF 1 SHEETS

FED. ROAD DIST. NO.	STATE	FED. AID PROJ. NO.	FISCAL YEAR	SHEET NO.	TOTAL SHEETS
HAWAII	HAW.	BR-083-1(58)	2023	27	129

GENERAL NOTES FOR TRAFFIC CONTROL PLAN:

1. The contractor shall make minor adjustments at intersections, driveways, bridges, structures, etc., to fit field conditions.
2. Cones shall be extended to a point where they are visible to approaching traffic.
3. Traffic control devices shall be installed such that the sign or device farthest from the work area is placed first. The others shall then be placed progressively toward the work area.
4. Regulatory and warning signs within the construction zone that are in conflict with the traffic control plans shall be removed or covered.
5. Flaggers and/or police officers shall be in sight of each other or in direct communication at all times.
6. All traffic lanes shall be a minimum of 10-feet wide.
7. All construction warning signs shall be promptly removed or covered whenever the message is not applicable or not in use and their supplemental plates are to be covered or removed during non-working hours.
8. The backs of all signs used for traffic control shall be appropriately covered to preclude the display of inapplicable sign messages (i.e., when signs have messages on both faces).
9. Permanent pavement markings and traffic signs shall be replaced upon completion of each phase of work.
10. Cones shall be spaced at a maximum distance of 20-feet apart. A minimum of six (6) channelizing devices shall be used for each taper length.
11. Driveways shall be kept open unless the owners of the property using the right-of-way are otherwise provided for satisfactorily. Further, the contractor shall control traffic going in and out of driveways.
12. Buffer and taper areas on approach to any work area shall be kept clear of vehicles and equipment.
13. A high level warning device (flag tree) shall be installed on approach to all work areas.
14. Contractor to coordinate traffic access with existing lot owners.

ORIGINAL PLAN
NOTE BOOK No.
SURVEY PLOTTED BY DATE
DRAWN BY "
TRACED BY "
DESIGNED BY "
QUANTITIES BY "
CHECKED BY "

MINGXUN DING
LICENSED PROFESSIONAL ENGINEER
NO. 9246-C
HAWAII U.S.A.

LICENSE EXPIRES 4/30/24

THIS WORK WAS PREPARED BY ME OR UNDER MY SUPERVISION

STATE OF HAWAII
DEPARTMENT OF TRANSPORTATION
HIGHWAYS DIVISION

GENERAL NOTES FOR TRAFFIC CONTROL PLAN
KAMEHAMEHA HIGHWAY
Laieloa Stream Bridge Replacement
Federal-Aid Project No. BR-083-1(58)

Scale: As Shown Date: September 2023

SHEET No. 1 OF 1 SHEETS

FED. ROAD DIST. NO.	STATE	FED. AID PROJ. NO.	FISCAL YEAR	SHEET NO.	TOTAL SHEETS
HAWAII	HAW.	BR-083-1(58)	2023	28	129

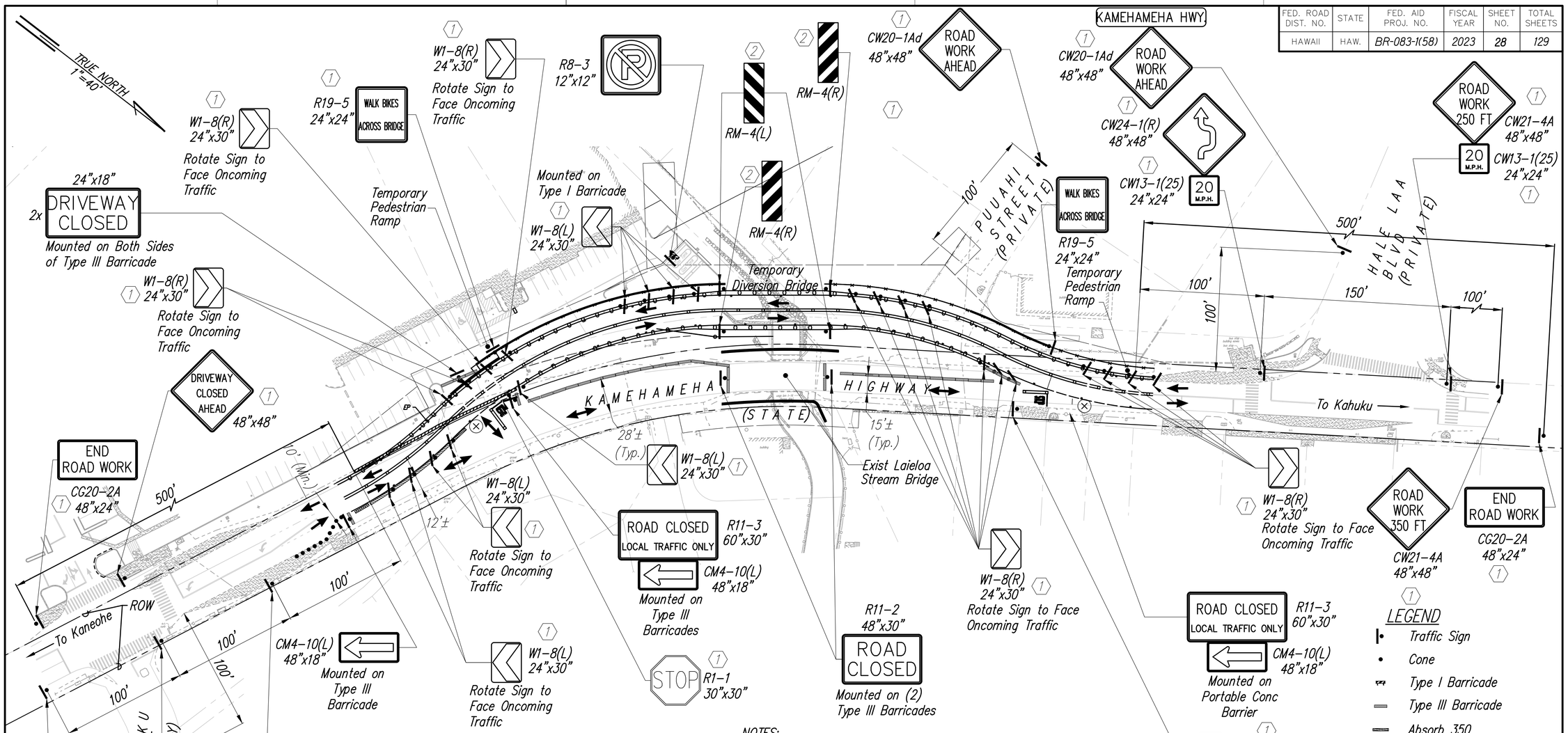

LEGEND

- Traffic Sign
- Cone
- Type I Barricade
- Type III Barricade
- Absorb 350
- Portable Concrete Barrier
- Direction of Traffic Flow
- Police Officer or Flagger
- White Stop Line and "STOP" Letters

KEY:

1. Install New Sign(s) with Post(s)
2. Install New Marker(s) with Post(s)

TRAFFIC CONTROL PLAN

Scale: 1"= 40'

NOTES:

1. Posted Speed Limits:
   Kamehameha Highway = 25 M.P.H.
   Anemoku Street = 25 M.P.H.
   Hale Laa Boulevard = 15 M.P.H.
2. Flaggers and/or Police Officers Shall Direct Traffic Entering and Leaving the Diversion Road during Normal Working Hours. Cost Shall be Incidental to 645.1000.
3. At Least One (1) Month Prior to the Commencement of Work, the Contractor Shall Send Fliers to Laie Community Association to Inform Adjacent Residents of the Change in Traffic Flow Pattern. Fliers Shall Include Contractor's Contact Number and Duration of Construction.
4. Applicable Signs and their Posts will be Located Behind Portable Concrete Barriers and/or Absorb 350.

ORIGINAL PLAN	SURVEY PLOTTED BY	DATE
	DRAWN BY	
NOTE BOOK	TRACED BY	
	DESIGNED BY	
No.	QUANTITIES BY	
	CHECKED BY	

MINGXUN DING
LICENSED PROFESSIONAL ENGINEER
NO. 9246-C
HAWAII U.S.A.

LICENSE EXPIRES 4/30/24

THIS WORK WAS PREPARED BY ME OR UNDER MY SUPERVISION

STATE OF HAWAII
DEPARTMENT OF TRANSPORTATION
HIGHWAYS DIVISION

DIVERSION ROAD
TRAFFIC CONTROL PLAN
KAMEHAMEHA HIGHWAY
Laieloa Stream Bridge Replacement
Federal-Aid Project No. BR-083-1(58)

Scale: As Shown Date: September 2023

SHEET No. 1 OF 1 SHEETS

FED. ROAD DIST. NO.	STATE	FED. AID PROJ. NO.	FISCAL YEAR	SHEET NO.	TOTAL SHEETS
HAWAII	HAW.	BR-083-1(58)	2023	29	129

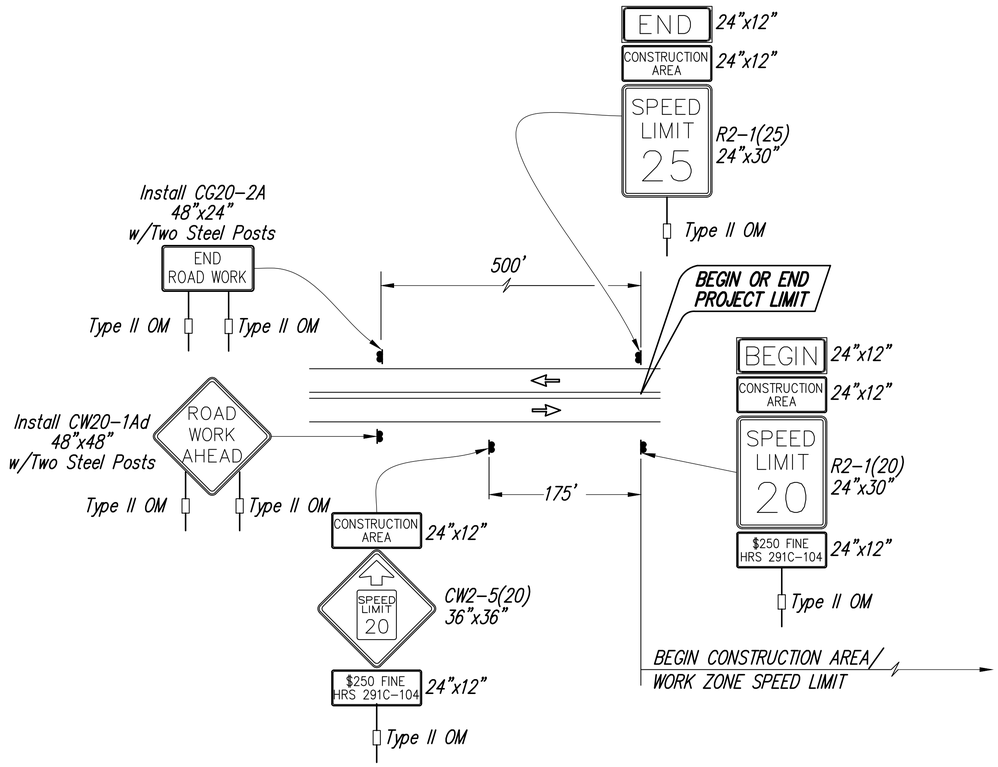

TYPICAL DETAIL FOR CONSTRUCTION SIGNS
ON TWO LANE OR MULTILANE UNDIVIDED LOW SPEED HIGHWAY

Work Zone Notes:

1. This Work Zone Sign Plan is intended for use on long-term stationary work zones/construction phases (3 days or more). All work zones or construction phases less than 3 days duration will use Traffic Control Plans shown in Section 945 of the Special Provisions.

2. All Existing Regulatory speed limit signs with posts within the work zone/project limit shall be removed and replaced with work zone speed limit sign assemblies (R2-1(20) and CW2-5(20) with "CONSTRUCTION AREA" and "$250 FINE HRS 291C-104" Supplemental Signs).

3. Construction sign assemblies shall be installed on both the approaching and trailing ends of each work zone as shown on this plan.

4. Each construction warning sign shall have a minimum of two (2) Type II OM. Each work zone speed limit assembly shall have a minimum of one (1) Type II OM. Installation of each Type II OM shall be considered incidental to Item No. 645.1000, Traffic Control.

5. Upon the completion of all physical work or as directed by the Engineer, all construction signs and work zone speed limit assemblies shall be removed. All speed limit signs and posts that were existing at the start of the project within the work zone/project limits shall be restored back to their original locations and configurations.

6. Placement of construction signs shall not obstruct the path of pedestrians and bicyclists.

7. The removal and restoration of existing regulatory speed limit signs with new posts along with the installation, maintenance and removal of work zone speed limit sign assemblies shall be considered incidental to Item No. 645.1000 – Traffic Control.

8. The installation, maintenance and removal of work zone speed limit sign assemblies shall be paid for under Item No. 645.1000 – Traffic Control.

9. The work zone speed limit signs shall be new and become the property of the State and shall be delivered at a location designated by the Engineer.

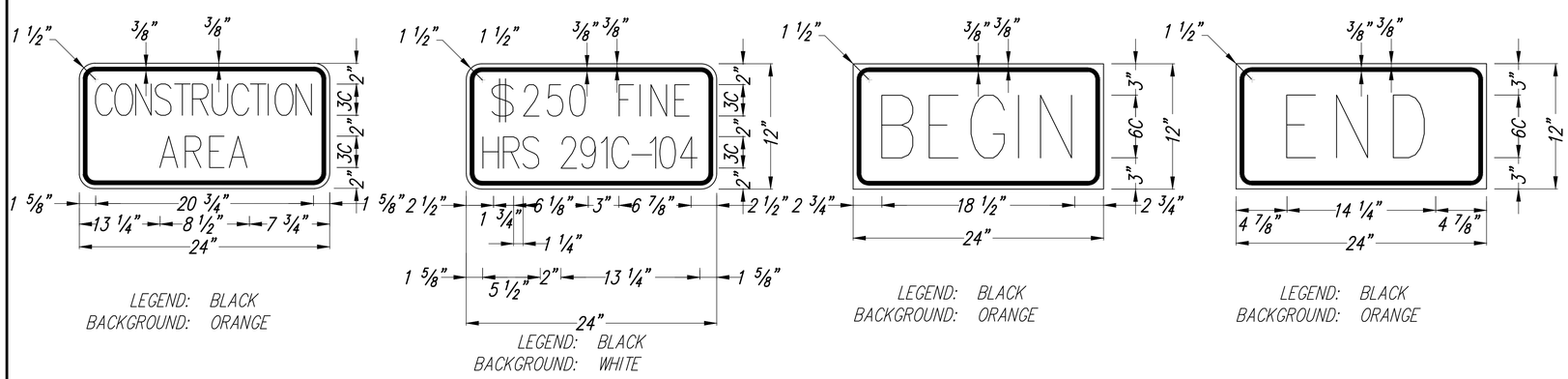

ORIGINAL PLAN	SURVEY PLOTTED BY	DATE
	DRAWN BY	
	TRACED BY	
NOTE BOOK	DESIGNED BY	
	QUANTITIES BY	
No.	CHECKED BY	

MINGXUN DING
LICENSED PROFESSIONAL ENGINEER
NO. 9248-C
HAWAII, U.S.A.

LICENSE EXPIRES 4/30/24

THIS WORK WAS PREPARED BY ME OR UNDER MY SUPERVISION

STATE OF HAWAII
DEPARTMENT OF TRANSPORTATION
HIGHWAYS DIVISION

LOW SPEED UNDIVIDED HIGHWAY WORK ZONE SIGNING PLAN AND DETAILS

KAMEHAMEHA HIGHWAY
Laieloa Stream Bridge Replacement
Federal-Aid Project No. BR-083-1(58)

Scale: As Shown Date: September 2023

SHEET No. 1 OF 1 SHEETS

FED. ROAD DIST. NO.	STATE	FED. AID PROJ. NO.	FISCAL YEAR	SHEET NO.	TOTAL SHEETS
HAWAII	HAW.	BR-083-1(58)	2023	30	129

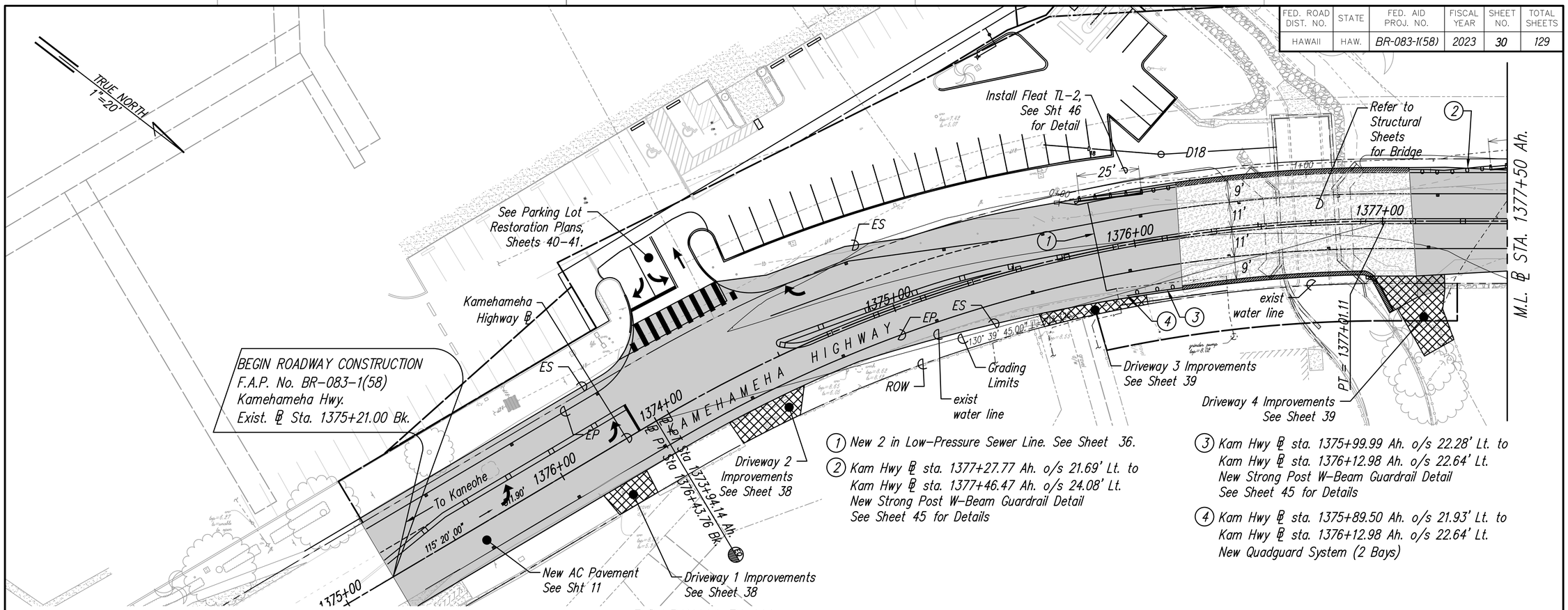

ROADWAY PLAN

Scale: 1"= 20'-0"

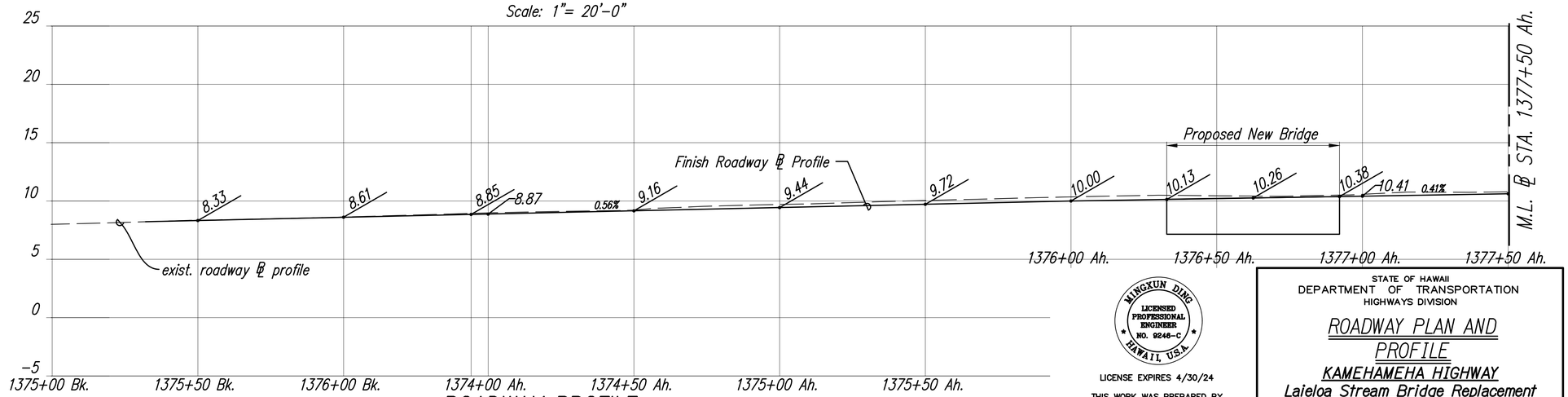

ROADWAY PROFILE

Horiz. Scale: 1"= 20'
Vert. Scale: 1"= 5'

MINGXUN DING
LICENSED PROFESSIONAL ENGINEER
NO. 9246-C
HAWAII, U.S.A.

LICENSE EXPIRES 4/30/24

THIS WORK WAS PREPARED BY ME OR UNDER MY SUPERVISION

STATE OF HAWAII
DEPARTMENT OF TRANSPORTATION
HIGHWAYS DIVISION

ROADWAY PLAN AND PROFILE

KAMEHAMEHA HIGHWAY
Laieloa Stream Bridge Replacement
Federal-Aid Project No. BR-083-1(58)

Scale: As Shown Date: September 2023

SHEET No. 1 OF 2 SHEETS

ORIGINAL PLAN
SURVEY PLOTTED BY ____ DATE
DRAWN BY ____
TRACED BY ____
NOTE BOOK DESIGNED BY ____
QUANTITIES BY ____
CHECKED BY ____
No. ____

FED. ROAD DIST. NO.	STATE	FED. AID PROJ. NO.	FISCAL YEAR	SHEET NO.	TOTAL SHEETS
HAWAII	HAW.	BR-083-1(58)	2023	31	129

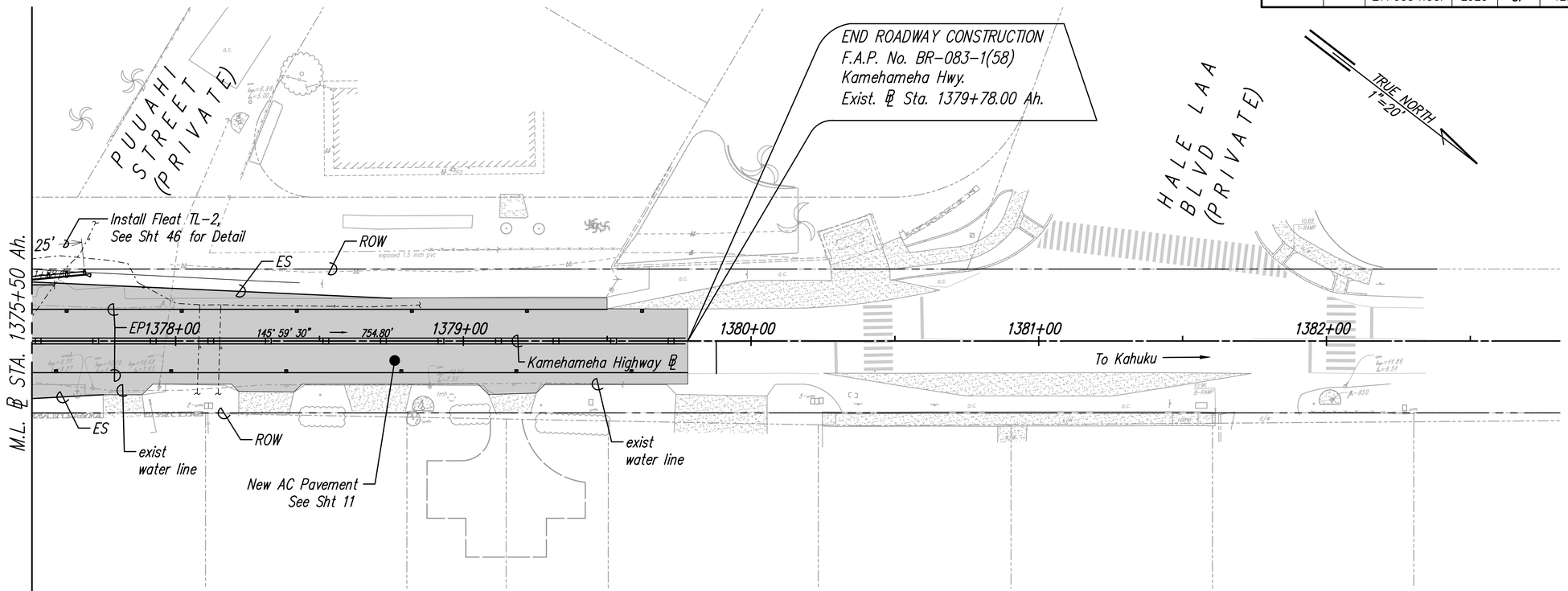

ROADWAY PLAN

Scale: 1"= 20'-0"

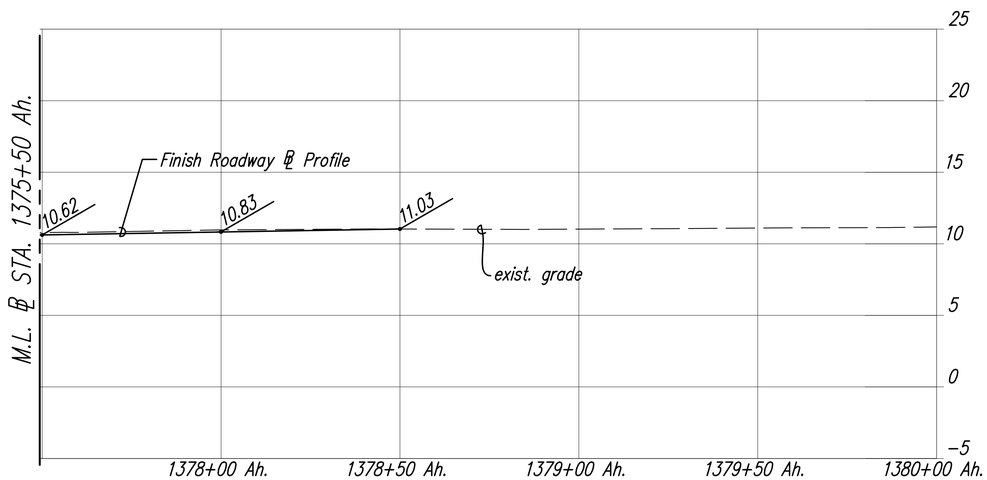

ROADWAY PROFILE

Horiz. Scale: 1"= 20'
Vert. Scale: 1"= 5'

ORIGINAL PLAN	SURVEY PLOTTED BY ____ DATE
	DRAWN BY ____
	TRACED BY ____
NOTE BOOK	DESIGNED BY ____
	QUANTITIES BY ____
No. ____	CHECKED BY ____

MINGXUN DING
LICENSED PROFESSIONAL ENGINEER
NO. 9246-C
HAWAII U.S.A.

LICENSE EXPIRES 4/30/24

THIS WORK WAS PREPARED BY ME OR UNDER MY SUPERVISION

STATE OF HAWAII
DEPARTMENT OF TRANSPORTATION
HIGHWAYS DIVISION

ROADWAY PLAN AND PROFILE

KAMEHAMEHA HIGHWAY
Laieloa Stream Bridge Replacement
Federal-Aid Project No. BR-083-1(58)

Scale: As Shown Date: September 2023

SHEET No. 2 OF 2 SHEETS

FED. ROAD DIST. NO.	STATE	FED. AID PROJ. NO.	FISCAL YEAR	SHEET NO.	TOTAL SHEETS
HAWAII	HAW.	BR-083-1(58)	2023	32	129

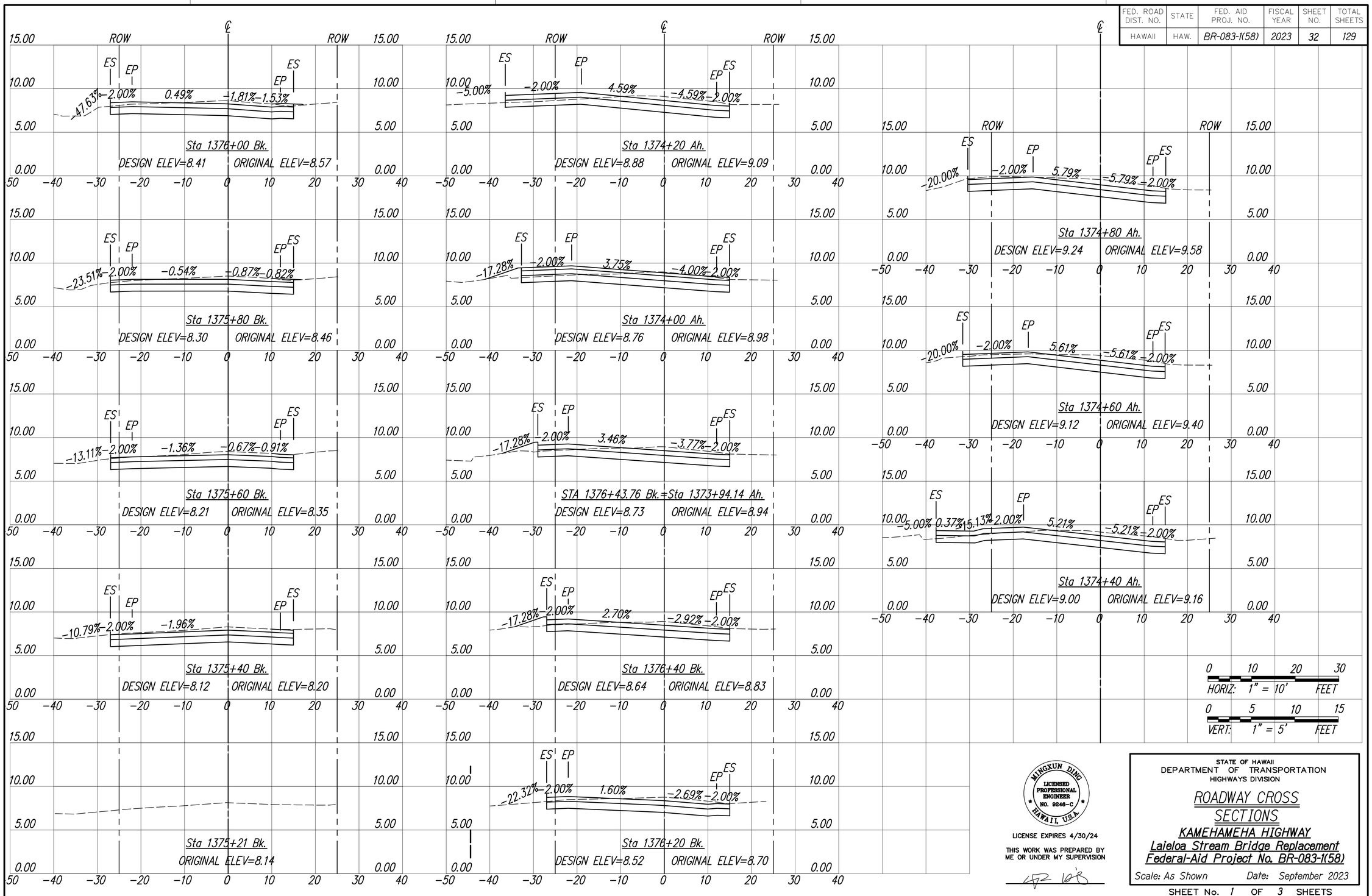

ORIGINAL PLAN
NOTE BOOK No.
SURVEY PLOTTED BY
DRAWN BY
TRACED BY
DESIGNED BY
QUANTITIES BY
CHECKED BY
DATE

MINGXUN DING
LICENSED PROFESSIONAL ENGINEER
NO. 9246-C
HAWAII U.S.A.

LICENSE EXPIRES 4/30/24

THIS WORK WAS PREPARED BY ME OR UNDER MY SUPERVISION

STATE OF HAWAII
DEPARTMENT OF TRANSPORTATION
HIGHWAYS DIVISION

ROADWAY CROSS SECTIONS

KAMEHAMEHA HIGHWAY
Laieloa Stream Bridge Replacement
Federal-Aid Project No. BR-083-1(58)

Scale: As Shown Date: September 2023

SHEET No. 1 OF 3 SHEETS

FED. ROAD DIST. NO.	STATE	FED. AID PROJ. NO.	FISCAL YEAR	SHEET NO.	TOTAL SHEETS
HAWAII	HAW.	BR-083-1(58)	2023	33	129

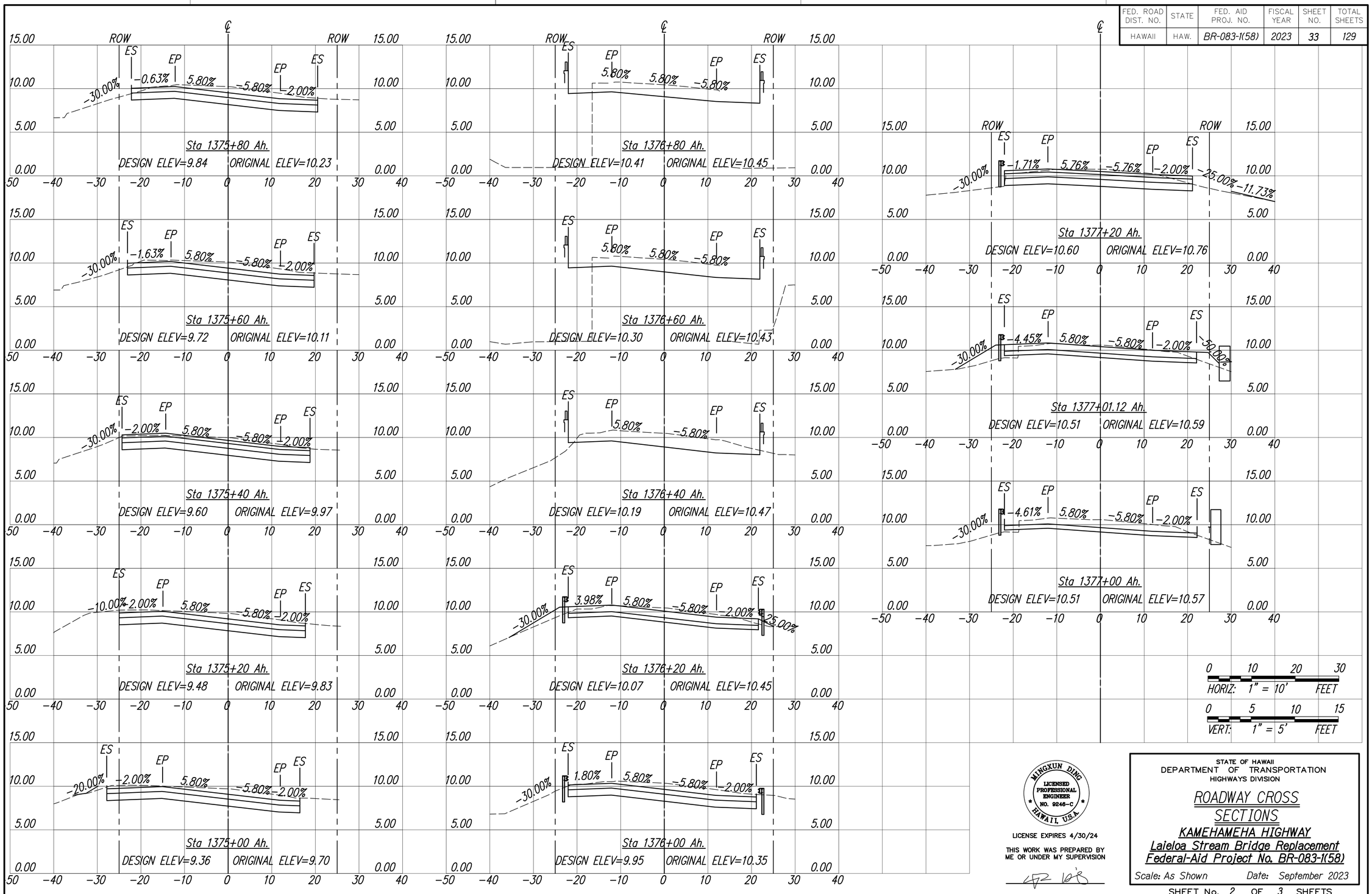

ORIGINAL PLAN
NOTE BOOK No.
SURVEY PLOTTED BY
DRAWN BY
TRACED BY
DESIGNED BY
QUANTITIES BY
CHECKED BY
DATE

MINGXUN DING
LICENSED PROFESSIONAL ENGINEER
NO. 9246-C
HAWAII, U.S.A.

LICENSE EXPIRES 4/30/24

THIS WORK WAS PREPARED BY ME OR UNDER MY SUPERVISION

STATE OF HAWAII
DEPARTMENT OF TRANSPORTATION
HIGHWAYS DIVISION

ROADWAY CROSS SECTIONS

KAMEHAMEHA HIGHWAY
Laieloa Stream Bridge Replacement
Federal-Aid Project No. BR-083-1(58)

Scale: As Shown Date: September 2023

SHEET No. 2 OF 3 SHEETS

FED. ROAD DIST. NO.	STATE	FED. AID PROJ. NO.	FISCAL YEAR	SHEET NO.	TOTAL SHEETS
HAWAII	HAW.	BR-083-1(58)	2023	34	129

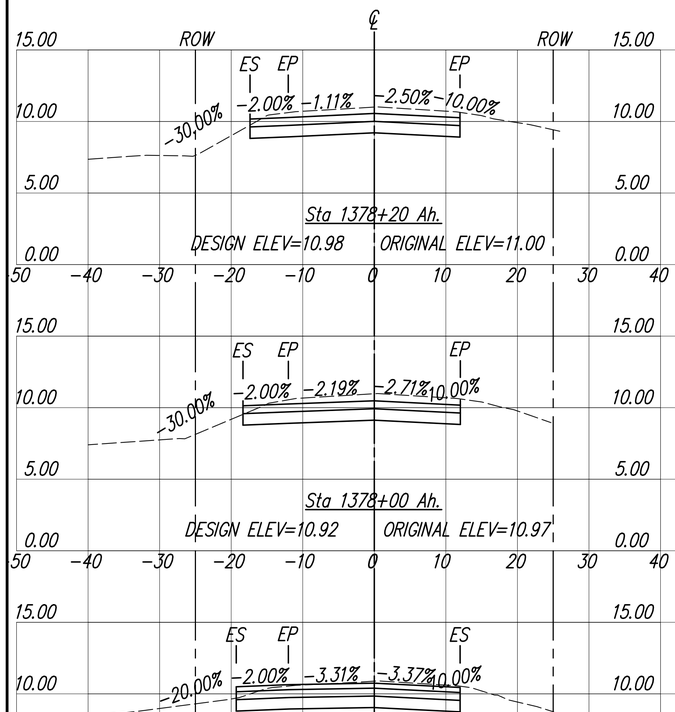

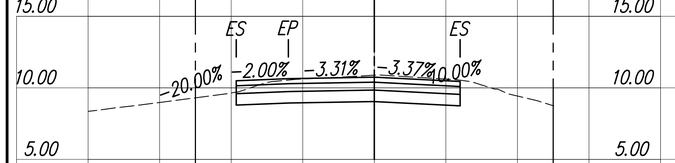

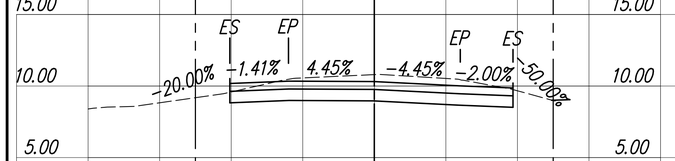

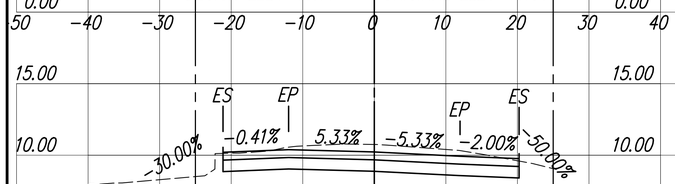

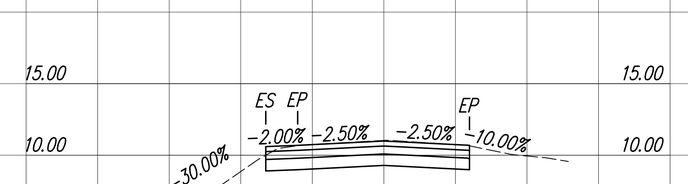

0 10 20 30
HORIZ: 1" = 10' FEET

0 5 10 15
VERT: 1" = 5' FEET

ORIGINAL PLAN	SURVEY PLOTTED BY	DATE
	DRAWN BY	
	TRACED BY	
NOTE BOOK	DESIGNED BY	
	QUANTITIES BY	
No.	CHECKED BY	

MINGXUN DING
LICENSED PROFESSIONAL ENGINEER
NO. 9246-C
HAWAII, U.S.A.

LICENSE EXPIRES 4/30/24

THIS WORK WAS PREPARED BY ME OR UNDER MY SUPERVISION

STATE OF HAWAII
DEPARTMENT OF TRANSPORTATION
HIGHWAYS DIVISION

ROADWAY CROSS SECTIONS

KAMEHAMEHA HIGHWAY
Laieloa Stream Bridge Replacement
Federal-Aid Project No. BR-083-1(58)

Scale: As Shown Date: September 2023

SHEET No. 3 OF 3 SHEETS

FED. ROAD DIST. NO.	STATE	FED. AID PROJ. NO.	FISCAL YEAR	SHEET NO.	TOTAL SHEETS
HAWAII	HAW.	BR-083-1(58)	2023	35	129

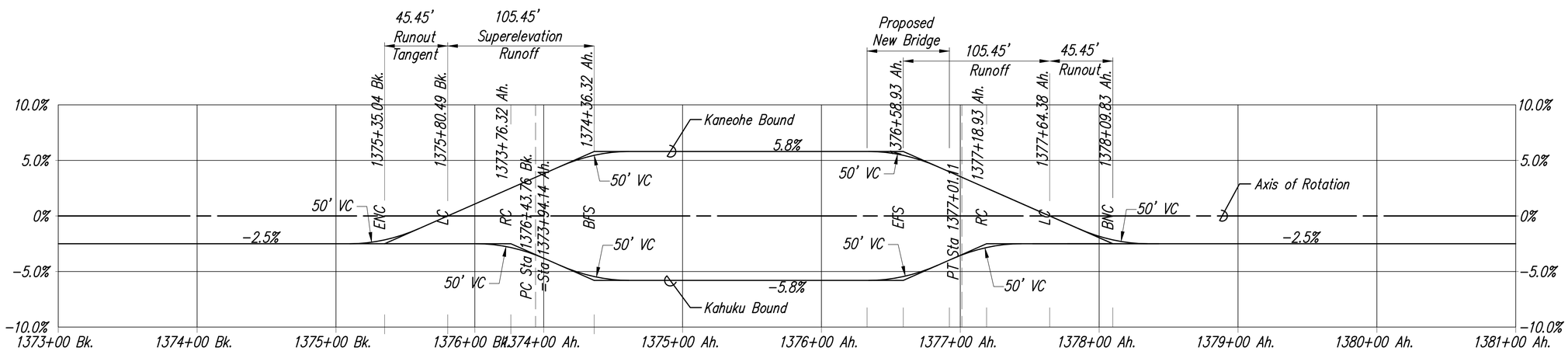

ROADWAY SUPERELEVATION DIAGRAM

Horiz. Scale: 1" = 40'
Vert. Scale: 1" = 5%

Note:

ENC: End Normal Crown
LC: Level Crown
RC: Reverse Crown
BFS: Begin Full Superelevation
EFS: End Full Superelevation
BNC: Begin Normal Crown

ORIGINAL PLAN	SURVEY PLOTTED BY	DATE
	DRAWN BY	
	TRACED BY	
NOTE BOOK	DESIGNED BY	
	QUANTITIES BY	
No.	CHECKED BY	

MINGXUN DING
LICENSED PROFESSIONAL ENGINEER
NO. 9246-C
HAWAII, U.S.A.

LICENSE EXPIRES 4/30/24

THIS WORK WAS PREPARED BY ME OR UNDER MY SUPERVISION

STATE OF HAWAII
DEPARTMENT OF TRANSPORTATION
HIGHWAYS DIVISION

ROADWAY SUPERELEVATION DIAGRAM

KAMEHAMEHA HIGHWAY
Laieloa Stream Bridge Replacement
Federal-Aid Project No. BR-083-1(58)

Scale: As Shown Date: September 2023

SHEET No. 1 OF 1 SHEETS

FED. ROAD DIST. NO.	STATE	FED. AID PROJ. NO.	FISCAL YEAR	SHEET NO.	TOTAL SHEETS
HAWAII	HAW.	BR-083-1(58)	2023	36	129

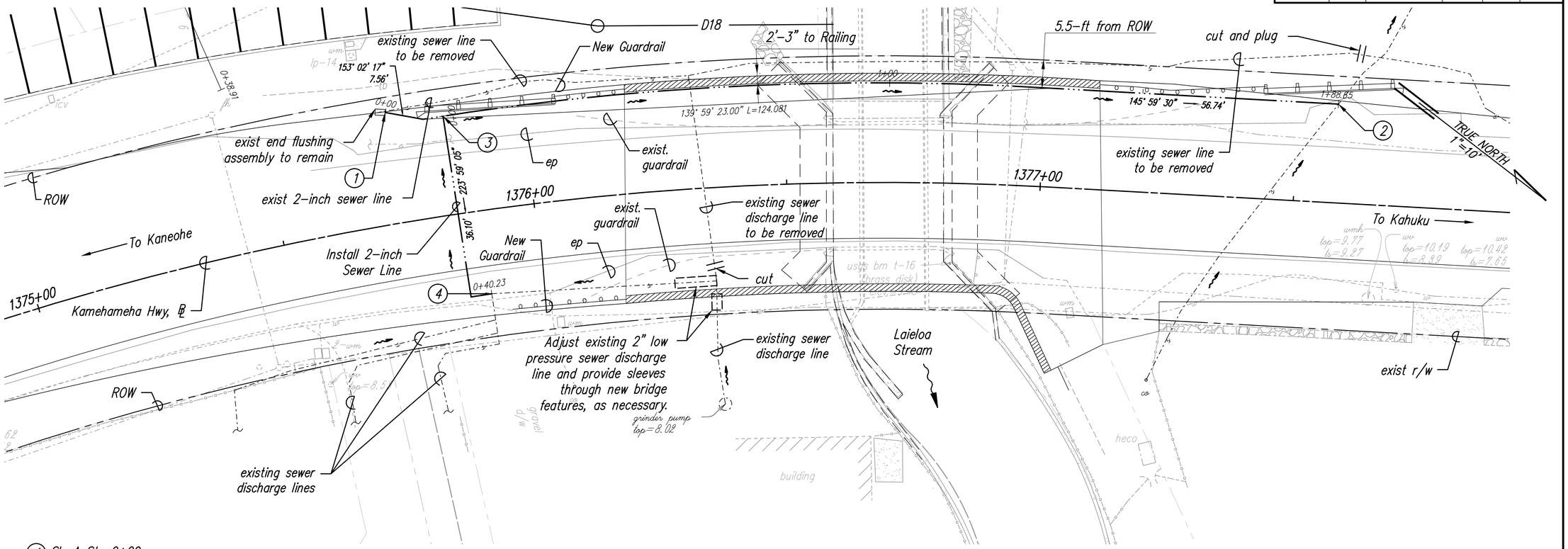

LOW PRESSURE SEWER PLAN

Scale: 1"= 10'

(1) SL-A Sta 0+00
Kamehameha Hwy. ℄ Sta 1375+73.15 o/s 24.00' Lt
Begin New 2-inch Sewer Main 'SL-A'
Connect to Existing End Flushing Assembly

(2) SL-A Sta 1+88.65
Kamehameha Hwy. ℄ Sta 1377+23.85 o/s 25.00' Lt
Connect to Existing 2-inch HDPE Sewer Main
Connection Couplings/Fittings as Required

(3) SL-B Sta 0+00
Kamehameha Hwy. ℄ Sta 1376+07.43 o/s 19.65' Lt
Begin New 2-inch Sewer Lateral 'SL-B'
2"x2" Tee
2" Isolation Valve

(4) SL-B Sta 0+40.23
Kamehameha Hwy. ℄ Sta 1375+89.26 o/s 16.54' Rt
Connect to existing sewer discharge lines
Connection Couplins/Fittings as required

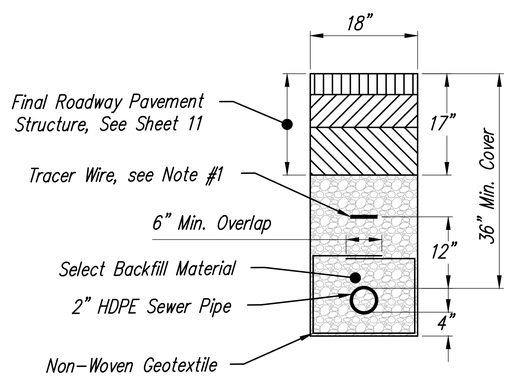

1. Tracer wire for sewer pipeline and discharge piping, high molecular weight - polyethylene tracer wire, 1-#14 AWG, by Paige Electronic or approved equal. Splicing shall be with 3M DBY/DBR direct bury splice kits. Tracer wire lead connections to be located in "in line flushing assemblies."
2. Two 45° bends shall be used to accomplish a 90° bend.
3. Use of job excavated material for bedding shall be subject to Engineer's approval.

LOW PRESSURE SEWER PIPE TRENCH DETAIL

Scale: 1"= 1'

Legend:
Pressure Sewer Flow Direction
Guardrail

Notes:
1. Install low-pressure sewer line under Laieloa Stream by Horizontal Directional Drilling (HDD) method (approximately 150 l.f.). Use open trench method for all other segments of new sewer lines.
2. See Specification, Section 652 - Horizontal Directional Drilling.
3. See Sewer Notes on Sheet 09.
4. All abandoned sewer lines within the State R/W shall be removed.

MINGXUN DING
LICENSED PROFESSIONAL ENGINEER
NO. 9246-C
HAWAII, U.S.A.

LICENSE EXPIRES 4/30/24

THIS WORK WAS PREPARED BY ME OR UNDER MY SUPERVISION

STATE OF HAWAII
DEPARTMENT OF TRANSPORTATION
HIGHWAYS DIVISION

LOW PRESSURE SEWER PLAN
KAMEHAMEHA HIGHWAY
Laieloa Stream Bridge Replacement
Federal-Aid Project No. BR-083-1(58)

Scale: As Shown Date: September 2023

SHEET No. 1 OF 1 SHEETS

ORIGINAL PLAN
NOTE BOOK No.
SURVEY PLOTTED BY
DRAWN BY
TRACED BY
DESIGNED BY
QUANTITIES BY
CHECKED BY
DATE

FED. ROAD DIST. NO.	STATE	FED. AID PROJ. NO.	FISCAL YEAR	SHEET NO.	TOTAL SHEETS
HAWAII	HAW.	BR-083-1(58)	2023	37	129

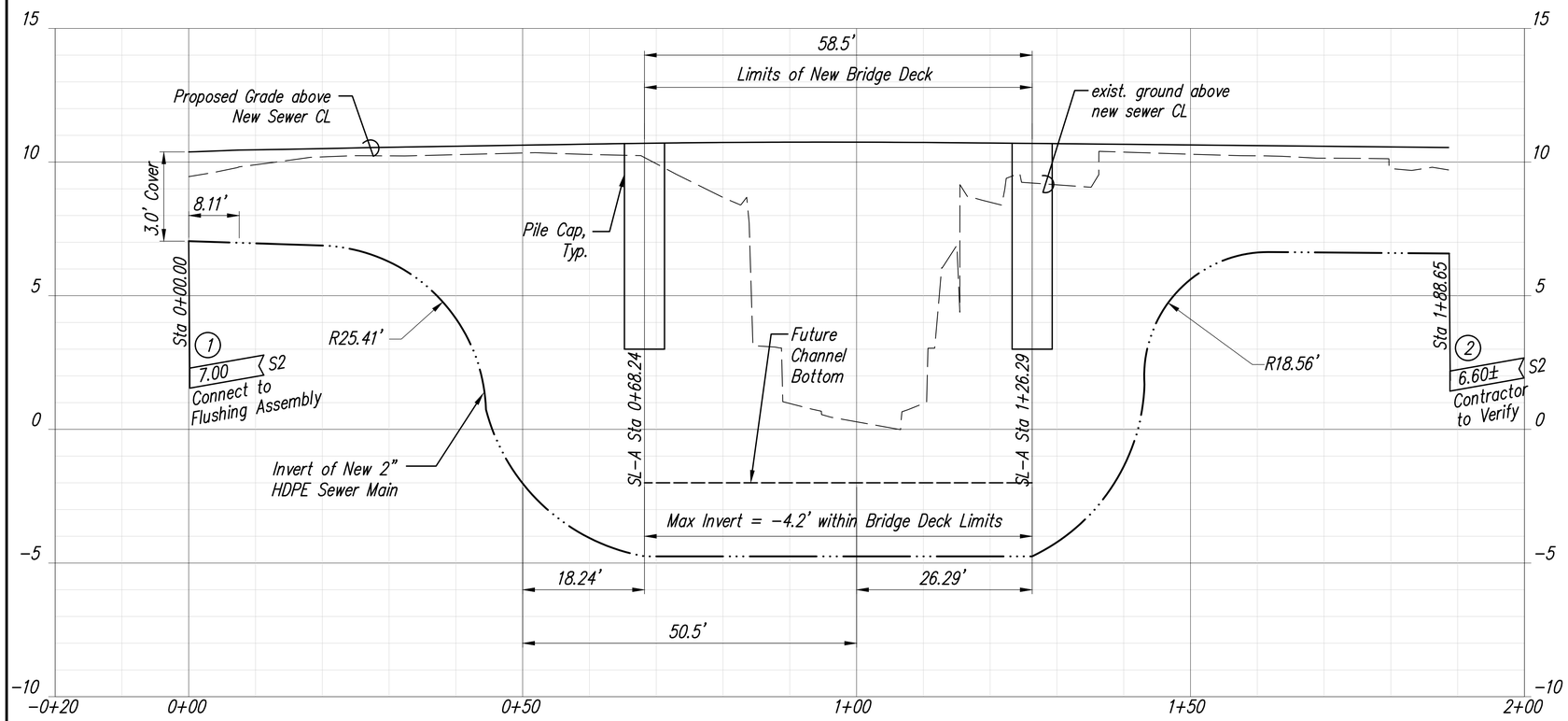

2-INCH SEWER LINE 'SL-A' PROFILE

Horiz. Scale: 1"= 10'
Vert. Scale: 1"= 2.5'

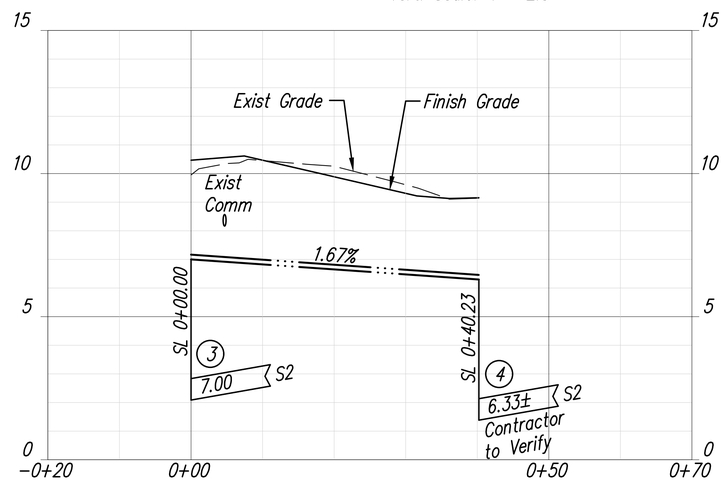

2-INCH SEWER LINE 'SL-B' PROFILE

Horiz. Scale: 1"= 10'
Vert. Scale: 1"= 2.5'

1. SL-A Sta 0+00
   Kamehameha Hwy. ℄ Sta 1375+73.15 o/s 24.00' Lt
   Begin New 2-inch Sewer Main 'SL-A'
   Connect to Existing End Flushing Assembly
2. SL-A Sta 1+88.65
   Kamehameha Hwy. ℄ Sta 1377+23.85 o/s 25.00' Lt
   Connect to Existing 2-inch HDPE Sewer Main
   Connection Couplings/Fittings as Required
3. SL-B Sta 0+00
   Kamehameha Hwy. ℄ Sta 1376+07.43 o/s 19.65' Lt
   Begin New 2-inch Sewer Lateral 'SL-B'
   2"x2" Tee
   2" Isolation Valve
4. SL-B Sta 0+40.23
   Kamehameha Hwy. ℄ Sta 1375+89.26 o/s 16.54' Rt
   Connect to existing sewer discharge lines
   Connection Couplins/Fittings as required

ORIGINAL PLAN	SURVEY PLOTTED BY	DATE
	DRAWN BY	
	TRACED BY	
NOTE BOOK	DESIGNED BY	
	QUANTITIES BY	
No.	CHECKED BY	

MINGXUN DING
LICENSED PROFESSIONAL ENGINEER
NO. 9246-C
HAWAII U.S.A.

LICENSE EXPIRES 4/30/24

THIS WORK WAS PREPARED BY ME OR UNDER MY SUPERVISION

STATE OF HAWAII
DEPARTMENT OF TRANSPORTATION
HIGHWAYS DIVISION

SEWER PROFILES

KAMEHAMEHA HIGHWAY
Laieloa Stream Bridge Replacement
Federal-Aid Project No. BR-083-1(58)

Scale: As Shown Date: September 2023

SHEET No. 1 OF 1 SHEETS

FED. ROAD DIST. NO.	STATE	FED. AID PROJ. NO.	FISCAL YEAR	SHEET NO.	TOTAL SHEETS
HAWAII	HAW.	BR-083-1(58)	2023	38	129

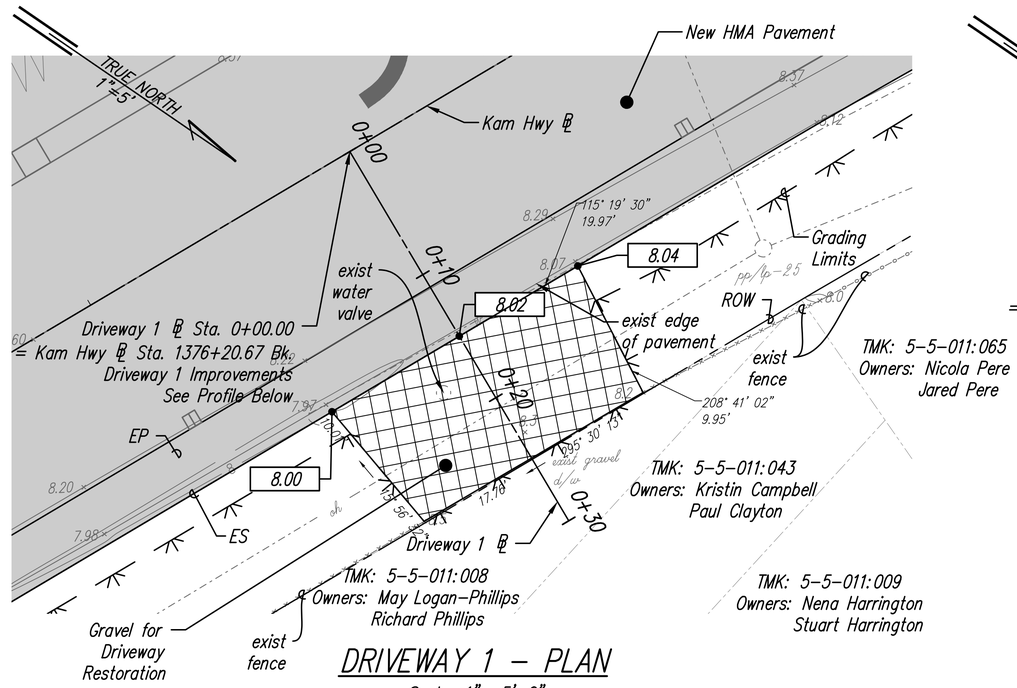

DRIVEWAY 1 – PLAN

Scale: 1"= 5'-0"

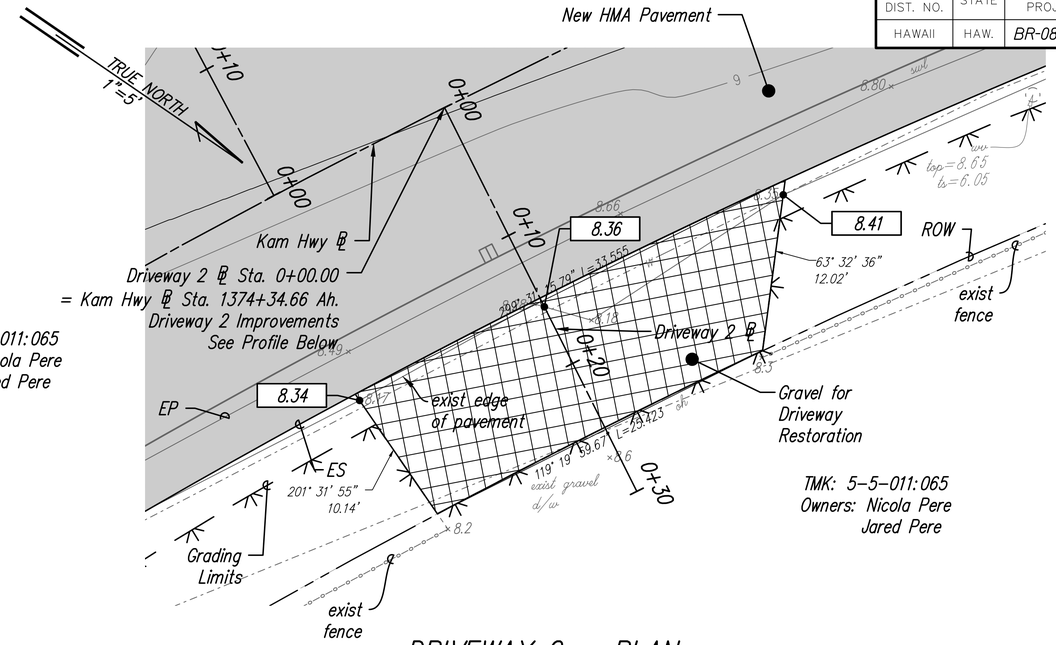

DRIVEWAY 2 – PLAN

Scale: 1"= 5'-0"

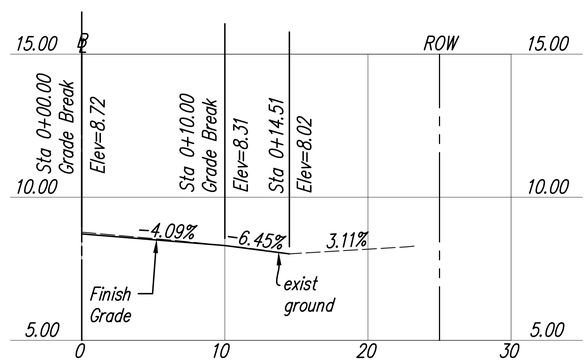

DRIVEWAY 1 – PROFILE

Horiz. Scale: 1"= 5'-0"
Vert. Scale: 1"= 2'-6"

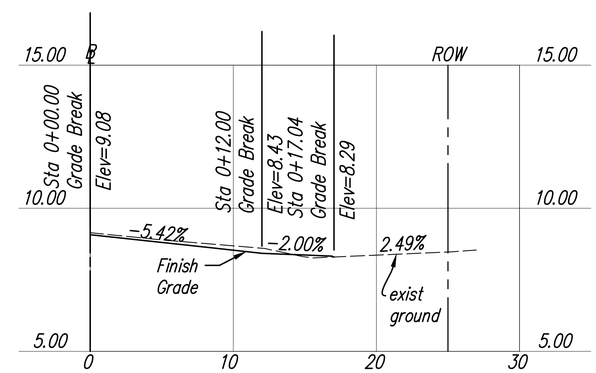

DRIVEWAY 2 – PROFILE

Horiz. Scale: 1"= 5'-0"
Vert. Scale: 1"= 2'-6"

Note: Contractor shall coordinate access directly with affected residents prior to their driveway reconstruction.

Legend

- Reconstructed Roadway
- Reconstructed Driveway
- 1369.09 — Finish Grade Elevation
- 1369.28± — Match to Exist. Ground, Contractor to Verify

ORIGINAL PLAN
NOTE BOOK No.
SURVEY PLOTTED BY DATE
DRAWN BY "
TRACED BY "
DESIGNED BY "
QUANTITIES BY "
CHECKED BY "

MINGXUN DING
LICENSED PROFESSIONAL ENGINEER
NO. 9246-C
HAWAII U.S.A.

LICENSE EXPIRES 4/30/24

THIS WORK WAS PREPARED BY ME OR UNDER MY SUPERVISION

STATE OF HAWAII
DEPARTMENT OF TRANSPORTATION
HIGHWAYS DIVISION

DRIVEWAY 1 AND 2 PLAN AND PROFILE

KAMEHAMEHA HIGHWAY
Laieloa Stream Bridge Replacement
Federal-Aid Project No. BR-083-1(58)

Scale: As Shown Date: September 2023

SHEET No. 1 OF 1 SHEETS

FED. ROAD DIST. NO.	STATE	FED. AID PROJ. NO.	FISCAL YEAR	SHEET NO.	TOTAL SHEETS
HAWAII	HAW.	BR-083-1(58)	2023	39	129

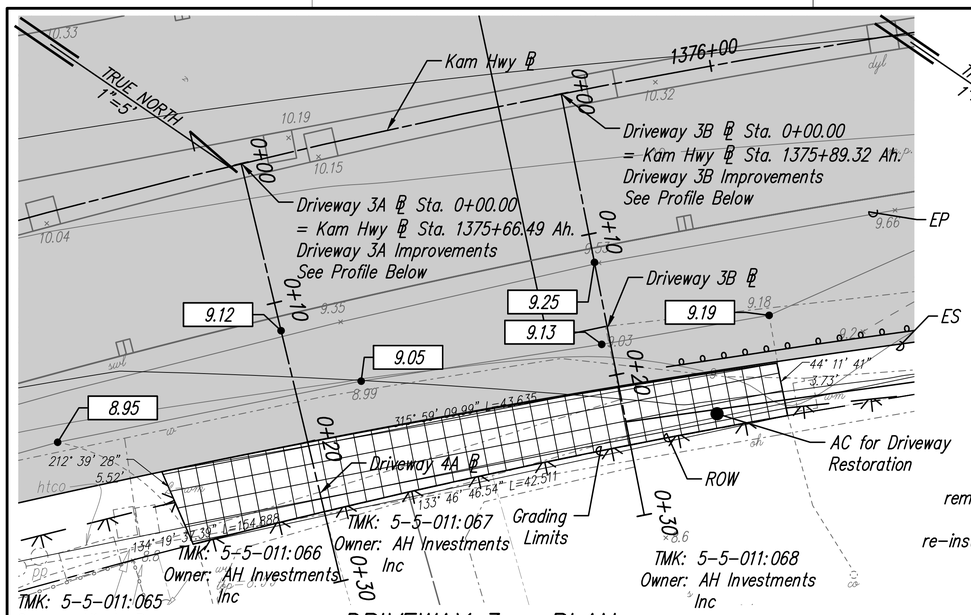

DRIVEWAY 3 – PLAN

Scale: 1"= 5'-0"

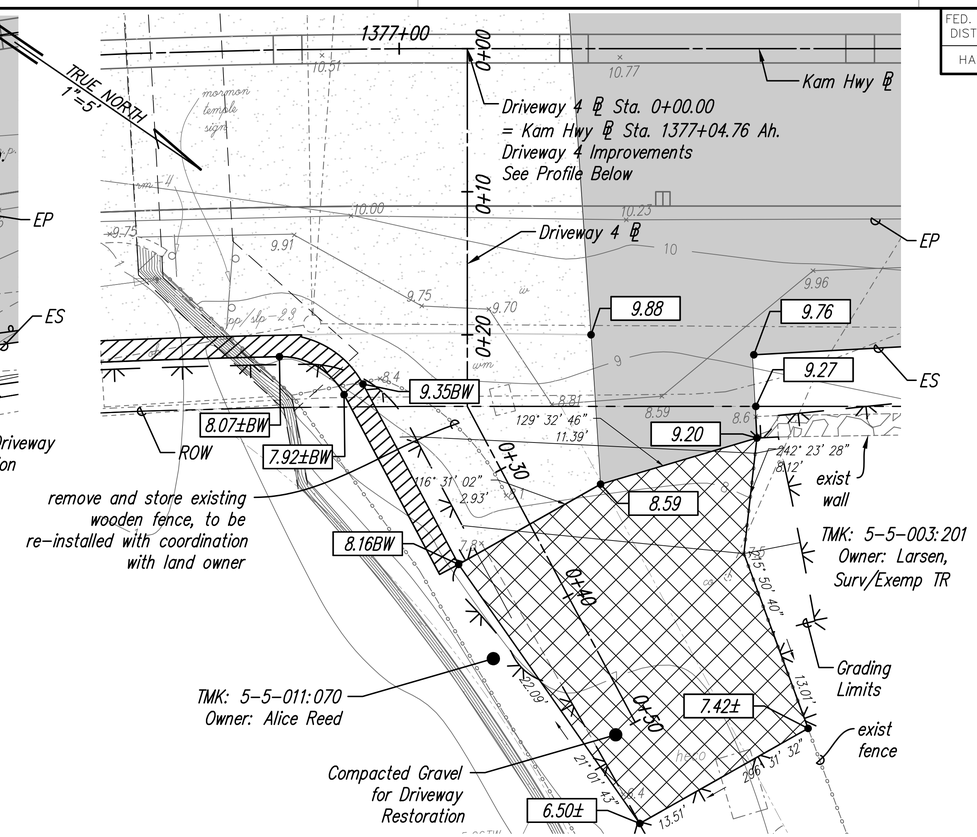

DRIVEWAY 4 – PLAN

Scale: 1"= 5'-0"

Note: Contractor shall coordinate access directly with affected residents prior to their driveway reconstruction.

Legend

- Reconstructed Roadway
- Reconstructed Driveway
- 1369.09 — Finish Grade Elevation
- 1369.28± — Match to Exist. Ground, Contractor to Verify

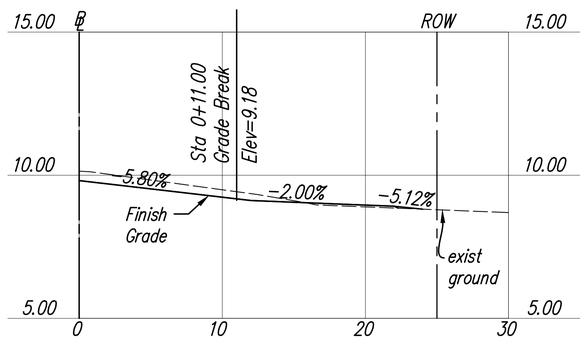

DRIVEWAY 3A – PROFILE

Horiz. Scale: 1"= 5'-0"
Vert. Scale: 1"= 2'-6"

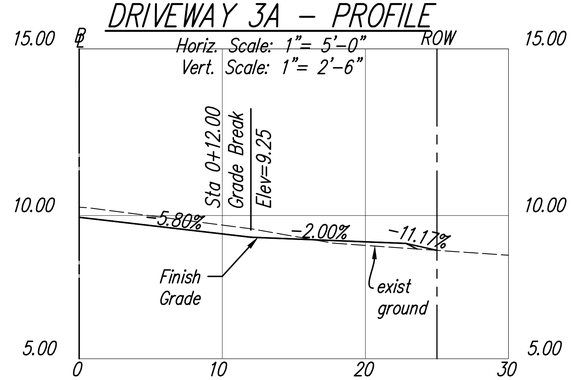

DRIVEWAY 3B – PROFILE

Horiz. Scale: 1"= 5'-0"
Vert. Scale: 1"= 2'-6"

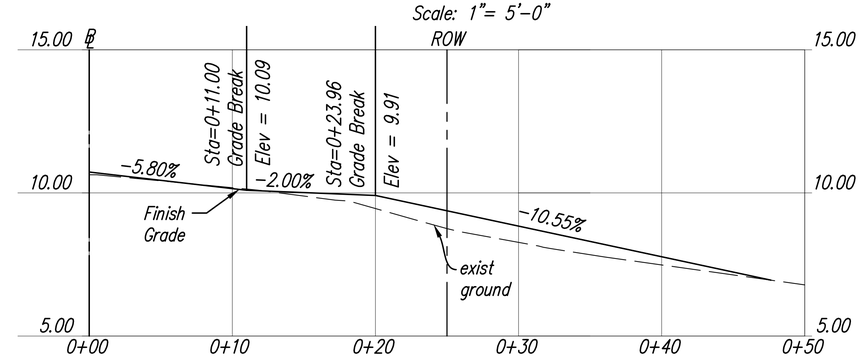

DRIVEWAY 4 – PROFILE

Horiz. Scale: 1"= 5'-0"
Vert. Scale: 1"= 2'-6"

MINGXUN DING
LICENSED PROFESSIONAL ENGINEER
NO. 9246-C
HAWAII USA

LICENSE EXPIRES 4/30/24

THIS WORK WAS PREPARED BY ME OR UNDER MY SUPERVISION

STATE OF HAWAII
DEPARTMENT OF TRANSPORTATION
HIGHWAYS DIVISION

DRIVEWAY 3 AND 4 PLAN AND PROFILE

KAMEHAMEHA HIGHWAY
Laieloa Stream Bridge Replacement
Federal-Aid Project No. BR-083-1(58)

Scale: As Shown Date: September 2023

SHEET No. 1 OF 1 SHEETS

ORIGINAL PLAN
NOTE BOOK No.
SURVEY PLOTTED BY DATE
DRAWN BY "
TRACED BY "
DESIGNED BY "
QUANTITIES BY "
CHECKED BY "

FED. ROAD DIST. NO.	STATE	FED. AID PROJ. NO.	FISCAL YEAR	SHEET NO.	TOTAL SHEETS
HAWAII	HAW.	BR-083-1(58)	2023	40	129

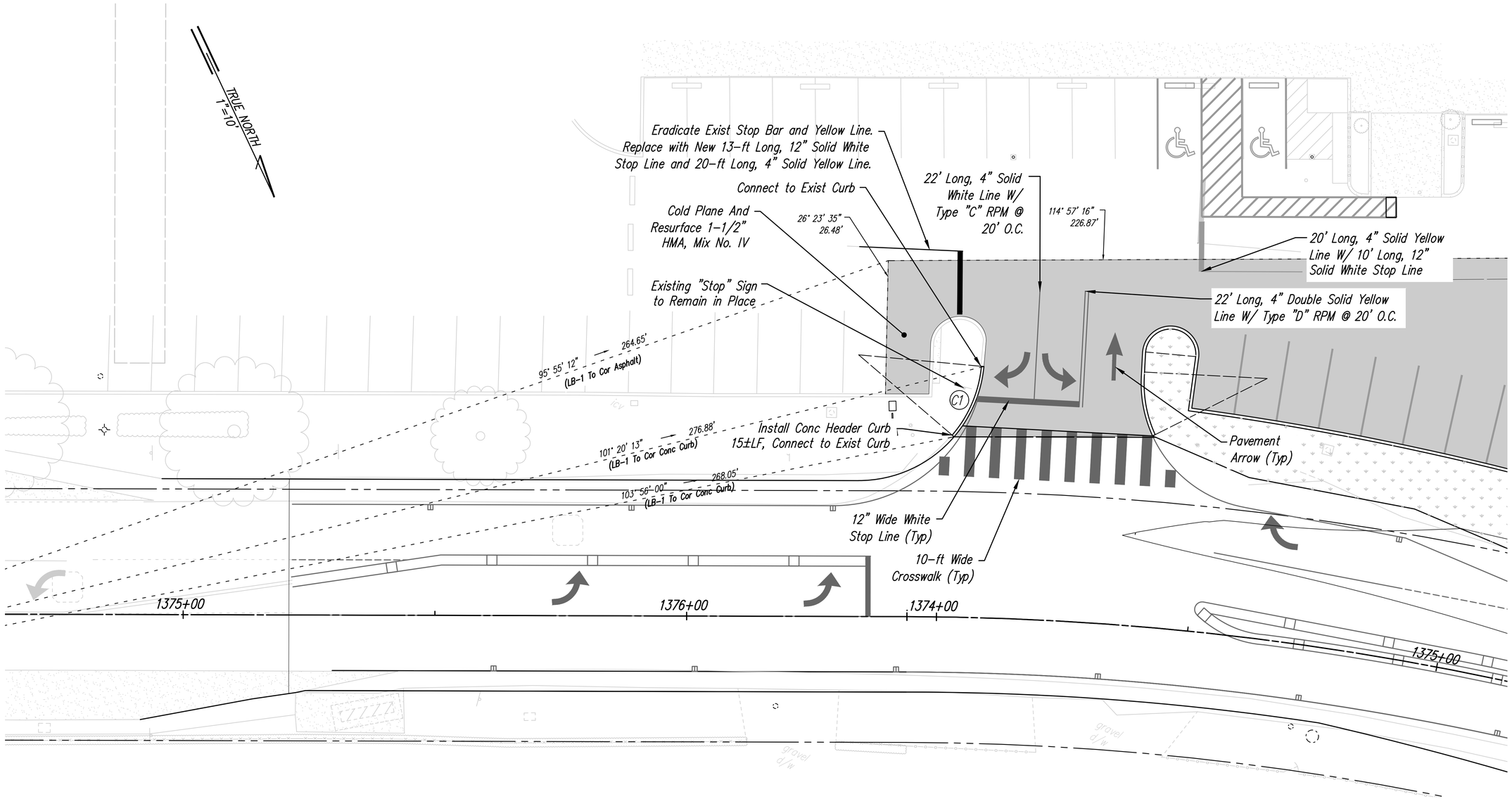

C1

Curve Data

R = 25.00'

Δ = 35°00'

T = 7.88'

C = 15.17'

L = 15.42'

PARKING LOT RESTORATION PLAN

Scale: 1"= 10'-0"

Legend

HMA Pavement, Refer to Details on Sht 11

Landscape Planting Area, See Shts 125-126

MINGXUN DING
LICENSED PROFESSIONAL ENGINEER
NO. 9248-C
HAWAII U.S.A.

LICENSE EXPIRES 4/30/24

THIS WORK WAS PREPARED BY ME OR UNDER MY SUPERVISION

STATE OF HAWAII
DEPARTMENT OF TRANSPORTATION
HIGHWAYS DIVISION

SHOPPING CENTER PARKING LOT RESTORATION PLAN

KAMEHAMEHA HIGHWAY

Laieloa Stream Bridge Replacement

Federal-Aid Project No. BR-083-1(58)

Scale: As Shown Date: September 2023

SHEET No. 1 OF 2 SHEETS

ORIGINAL PLAN	SURVEY PLOTTED BY	DATE
	DRAWN BY	
	TRACED BY	
NOTE BOOK	DESIGNED BY	
	QUANTITIES BY	
No.	CHECKED BY	

FED. ROAD DIST. NO.	STATE	FED. AID PROJ. NO.	FISCAL YEAR	SHEET NO.	TOTAL SHEETS
HAWAII	HAW.	BR-083-1(58)	2023	41	129

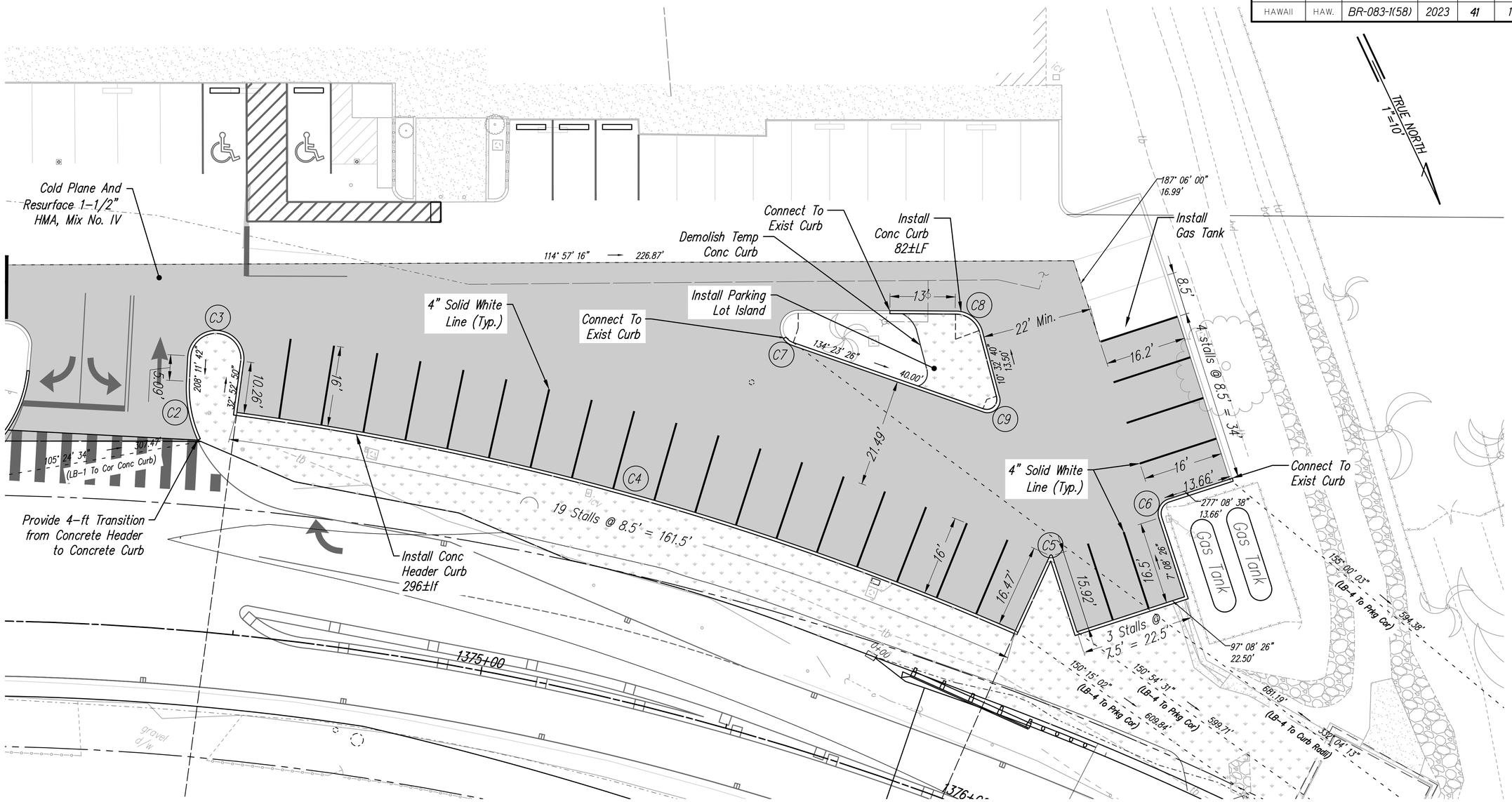

PARKING LOT RESTORATION PLAN

Scale: 1"= 10'-0"

C2	C3	C4	C5	C6	C7	C8	C9
Curve Data	Curve Data	Curve Data	Curve Data	Curve Data	Curve Data	Curve Data	Curve Data
R = 25.00'	R = 5.60'	R = 580.00'	R = 0.25'	R = 3.00'	R = 3.60'	R = 5.50'	R = 2.50'
Δ = 29°38'45"	Δ = 180°00'00"	Δ = 15°57'14"	Δ = 137°27'00"	Δ = 90°00'00"	Δ = 161°14'18"	Δ = 69°46'35"	Δ = 130°20'21"
T = 7.96'	T = 1006.15'	T = 81.28'	T = 0.64'	T = 3.0'	T = 21.80'	T = 4.04'	T = 6.62'
C = 15.18'	C = 11.20'	C = 160.98'	C = 0.47'	C = 4.24'	C = 7.10'	C = 6.51'	C = 4.68'
L = 14.42'	L = 17.54'	L = 161.50'	L = 0.60'	L = 4.71'	L = 10.13'	L = 6.97'	L = 6.05'

Legend

HMA Pavement, Refer to Details on Sht 11

Landscape Planting Area, See Shts 125-126

MINGXUN DING
LICENSED PROFESSIONAL ENGINEER
NO. 9246-C
HAWAII, U.S.A.

LICENSE EXPIRES 4/30/24

THIS WORK WAS PREPARED BY ME OR UNDER MY SUPERVISION

STATE OF HAWAII
DEPARTMENT OF TRANSPORTATION
HIGHWAYS DIVISION

SHOPPING CENTER PARKING LOT RESTORATION PLAN

KAMEHAMEHA HIGHWAY

Laieloa Stream Bridge Replacement
Federal-Aid Project No. BR-083-1(58)

Scale: As Shown Date: September 2023

SHEET No. 2 OF 2 SHEETS

ORIGINAL PLAN
NOTE BOOK No.
SURVEY PLOTTED BY
DRAWN BY
TRACED BY
DESIGNED BY
QUANTITIES BY
CHECKED BY
DATE

FED. ROAD DIST. NO.	STATE	FED. AID PROJ. NO.	FISCAL YEAR	SHEET NO.	TOTAL SHEETS
HAWAII	HAW.	BR-083-1(58)	2023	42	129

PAVEMENT MARKING & SIGNAGE NOTES

1. Layout of pavement markings and signage shall be done by the Contractor and approved by the Engineer prior to any installation work.
2. Exist pavement markings not incorporated in the final traffic pattern shall be removed as directed by the Engineer. Costs shall be incidental to the various pavement marking items.
3. Raised pavement markers shall not be installed within crosswalks.
4. Final locations of all signs shall be approved by the Engineer prior to any installation work.
5. Exist signs not shown on these plans shall remain as posted unless otherwise directed by the Engineer. Removal and disposal of existing signs and/or posts as designated on these plans shall be incidental to the various signing items.
6. Final locations of all Stop Lines shall be approved by the Engineer prior to installation.
7. All pavement markings shall be as noted on the legend or plans.
8. All preformed pavement marking tapes over existing pavement shall be applied with an approved primer as recommended by the tape manufacturer and as approved by the Engineer. The primer shall be allowed to dry to the tacky stage prior to tape application.
9. Sign posts shall be square tube posts (2" or 2 1/2") unless shown on these plans or directed by the Engineer.
10. Removal of Exist Delineators and Posts as directed by the Engineer shall be considered incidental to the various signing items.
11. Exist signs that are to be replaced shall not be removed until new signs are installed as replacements, or the messages are no longer necessary.
12. Backing for all new regulatory and warning signs shall not be spliced.
13. All sign panels shall conform to Section 621B of Special Provisions and the latest editions and amendments of the following FHWA publications:
    a. "Manual on Uniform Traffic Control Devices for Street and Highways" (MUTCD)
    b. "Standard Highway Signs"
    c. "Standard Alphabets for Highway Signs"
14. All new and relocated signs and markers installed on pipe post or light standard are to be mounted on new square tube posts or on light standard with band brackets and steel braces.
15. The Contractor shall erect at the beginning of the project and at the end of the project advance construction warning signs as indicated on the plans or as directed by the Engineer for the duration of the highway project and shall be maintained by the Contractor. These signs shall be placed in addition to the required traffic control signs called for in Section 645–Work Zone Traffic Control. The advance construction warning signs shall be new and become the property of the State. The Contractor shall remove, clean, and deliver the signs and posts to the Oahu District Baseyard or as directed by the Engineer at the end of the project.
16. The Contractor shall notify the Department of Transportation Services, Public transit division, at 768–8396, and Oahu Transit Services, Inc. (bus operations: 848–4578 or 852–6016 and paratransit operations: 454–5041 or 454–5020) two weeks prior to beginning any work, informing them of location, scope of work, proposed closure of any street or traffic lanes, and the need to relocate any bus stop.

LEGEND

4" Double Solid Yellow with Type D Raised Pavement Markers @ 20'–0" o.c. (Tape, Type I or Thermoplastic Extrusion)

4" or 8" White Edge Stripe with Type C Raised Pavement Markers @ 40'–0" o.c. (Tape, Type II or Thermoplastic Extrusion)

4" or 8" White Edge Stripe Tape, Type II or Thermoplastic Extrusion)

4" or 8" White Dashed Line 3'–0" Long with 1'–0" Spacing (Tape, Type II or Thermoplastic Extrusion)

12" White Stop Line (Tape, Type III or Thermoplastic Extrustion)

Crosswalk Marking (Tape, Type III or Thermoplastic Extrusion)

Pavement Arrow (Thermoplastic Extrusion)

Traffic Sign

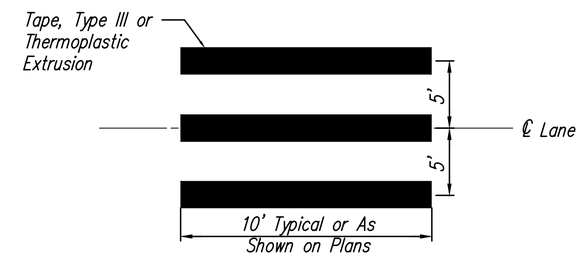

TYPICAL CROSSWALK STRIPING

Not to Scale

ORIGINAL PLAN	SURVEY PLOTTED BY	DATE
	DRAWN BY	
	TRACED BY	
NOTE BOOK	DESIGNED BY	
	QUANTITIES BY	
No.	CHECKED BY	

MINGXUN DING
LICENSED PROFESSIONAL ENGINEER
NO. 9246-C
HAWAII, USA

LICENSE EXPIRES 4/30/24

THIS WORK WAS PREPARED BY ME OR UNDER MY SUPERVISION

STATE OF HAWAII
DEPARTMENT OF TRANSPORTATION
HIGHWAYS DIVISION

PAVEMENT MARKING AND SIGNAGE NOTES AND LEGEND

KAMEHAMEHA HIGHWAY
Laieloa Stream Bridge Replacement
Federal-Aid Project No. BR-083-1(58)

Scale: As Shown Date: September 2023

SHEET No. 1 OF 1 SHEETS

FED. ROAD DIST. NO.	STATE	FED. AID PROJ. NO.	FISCAL YEAR	SHEET NO.	TOTAL SHEETS
HAWAII	HAW.	BR-083-1(58)	2023	43	129

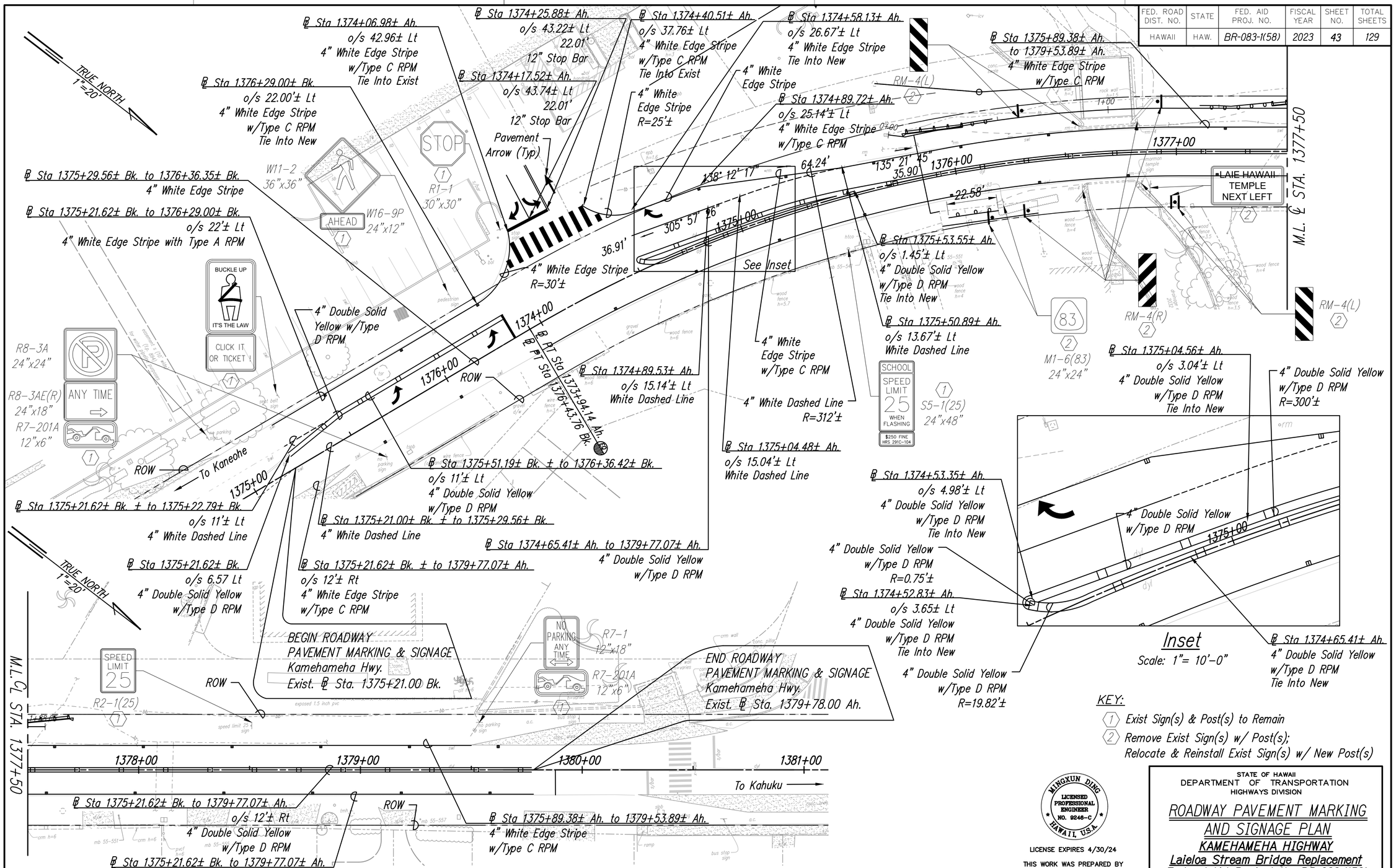

ROADWAY PAVEMENT MARKING & SIGNAGE PLAN

Scale: 1"= 20'-0"

ORIGINAL PLAN		DATE
	SURVEY PLOTTED BY	
	DRAWN BY	
	TRACED BY	
NOTE BOOK	DESIGNED BY	
	QUANTITIES BY	
No.	CHECKED BY	

KEY:

(1) Exist Sign(s) & Post(s) to Remain

(2) Remove Exist Sign(s) w/ Post(s); Relocate & Reinstall Exist Sign(s) w/ New Post(s)

MINGXUN DING
LICENSED PROFESSIONAL ENGINEER
NO. 9246-C
HAWAII, U.S.A.

LICENSE EXPIRES 4/30/24

THIS WORK WAS PREPARED BY ME OR UNDER MY SUPERVISION

STATE OF HAWAII
DEPARTMENT OF TRANSPORTATION
HIGHWAYS DIVISION

ROADWAY PAVEMENT MARKING AND SIGNAGE PLAN

KAMEHAMEHA HIGHWAY

Laieloa Stream Bridge Replacement
Federal-Aid Project No. BR-083-1(58)

Scale: As Shown Date: September 2023

SHEET No. 1 OF 1 SHEETS

FED. ROAD DIST. NO.	STATE	FED. AID PROJ. NO.	FISCAL YEAR	SHEET NO.	TOTAL SHEETS
HAWAII	HAW.	BR-083-1(58)	2023	44	129

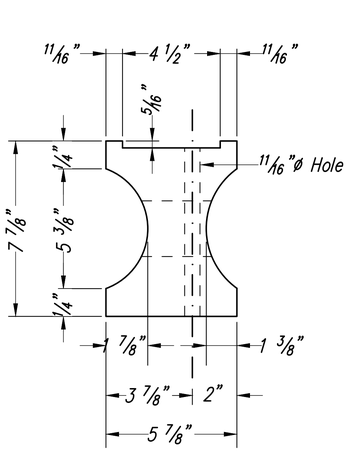

TOP

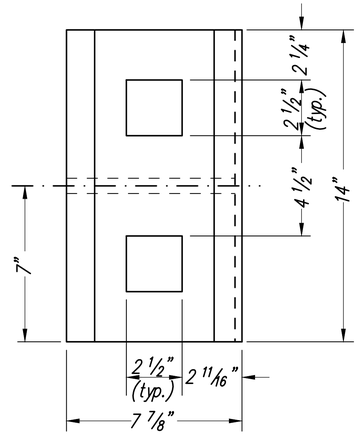

SIDE

RECYCLED PLASTIC BLOCKOUT (TYPE I)

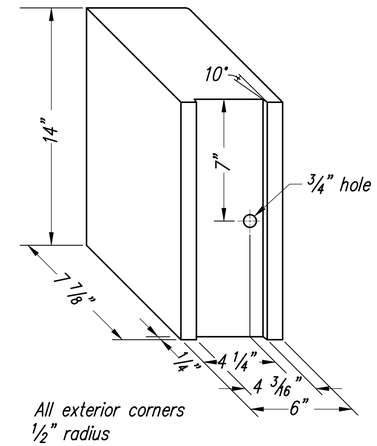

RECYCLED POLYETHYLENE OFFSET BLOCK (TYPE II)

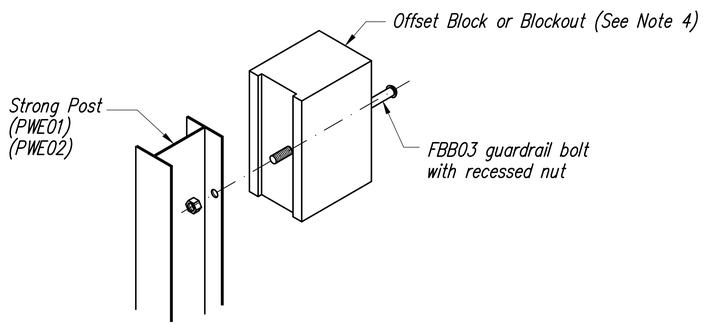

Exploded View
(Rail and washer not shown)

STEEL POST AND BLOCK DETAIL

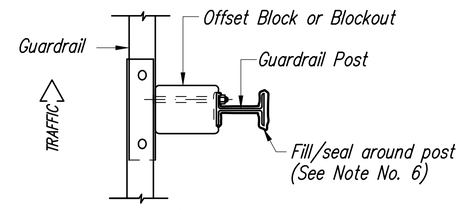

PLAN

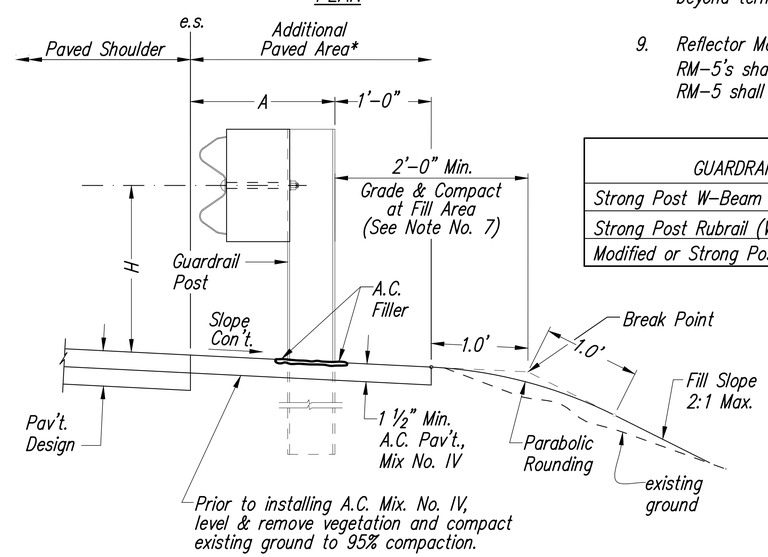

ELEVATION

TYPICAL GUARDRAIL INSTALLATION

Work Zone Notes:

1. All hardware, posts and fasteners shall be hot-dip zinc coated galvanized after fabrication. No punching, drilling or cutting will be permitted after galvanizing.
2. Where conditions require, special post lengths in increments of 6 inches may be specified.
3. All fasteners, posts, and rail elements (i.e. FBB03, PWE01, RWM02b, etc.) shall conform to the latest edition and amendments of "A Guide to Standardized Highway Barrier Rail Hardware", a report prepared and approved by the AASHTO-AGC-ARTBA Joint Cooperative Committee, Subcommittee On New Highway Materials, Task Force 13 Report. Dimensions of fastners, posts and rail elements have been converted from metric units into their present form.
4. The Recycled Plastic Block or Offset Block shall be approved by the State.
5. All new guardrail systems (system consists of total length of guardrail including both end treatments) shall include the Additional Paved Area.
6. After the guardrail posts are installed in the paved area, the Contractor shall fill/seal around each guardrail post and all cracks in the paved area caused during the guardrail post installation. If required by the inspector/engineer, the Contractor shall tamper the paved area around the guardrail post prior to filling/sealing. All costs associated with this work shall not be paid for separately, but shall be considered incidental to the various guardrail items.
7. When standards for the fill slope area cannot be met, a site specific, engineer approved design may be used.
8. New Hot Mix Asphalt (HMA) pavement at guardrails shall extend 6 feet longitudinally beyond terminal ends.
9. Reflector Markers (RM-5) mounted on guardrails shall be spaced every 25 feet. RM-5's shall not be installed on Terminal Sections. Furnishing and installing of each RM-5 shall be considered incidental to the adjacent guardrail system.

GUARDRAIL TYPE	DIMENSION	
	H	A
Strong Post W-Beam	1'-9 5/8"	1'-6"
Strong Post Rubrail (W-Beam)	2'-0"	1'-6"
Modified or Strong Post Thrie Beam	2'-0"	2'-0"

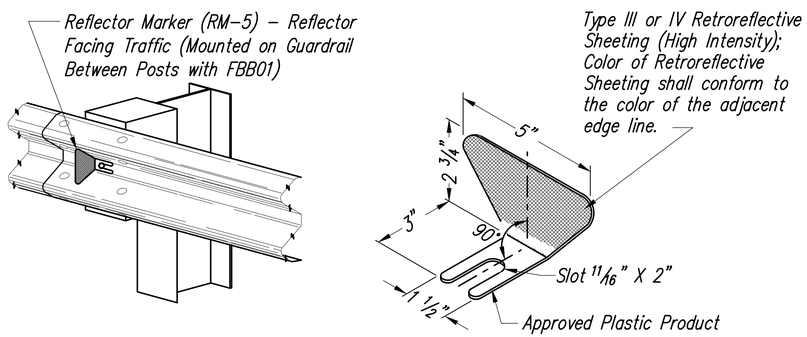

REFLECTOR MARKER (RM-5) DETAIL AND TYPICAL INSTALLATION

ORIGINAL PLAN	SURVEY PLOTTED BY	DATE
	DRAWN BY	
NOTE BOOK	TRACED BY	
	DESIGNED BY	
No.	QUANTITIES BY	
	CHECKED BY	

MINGXUN DING
LICENSED PROFESSIONAL ENGINEER
NO. 9246-C
HAWAII U.S.A.

LICENSE EXPIRES 4/30/24

THIS WORK WAS PREPARED BY ME OR UNDER MY SUPERVISION

STATE OF HAWAII
DEPARTMENT OF TRANSPORTATION
HIGHWAYS DIVISION

GUARDRAIL NOTES AND DETAILS

KAMEHAMEHA HIGHWAY
Laieloa Stream Bridge Replacement
Federal-Aid Project No. BR-083-1(58)

Scale: As Shown Date: September 2023

SHEET No. 1 OF 1 SHEETS

FED. ROAD DIST. NO.	STATE	FED. AID PROJ. NO.	FISCAL YEAR	SHEET NO.	TOTAL SHEETS
HAWAII	HAW.	BR-083-1(58)	2023	45	129

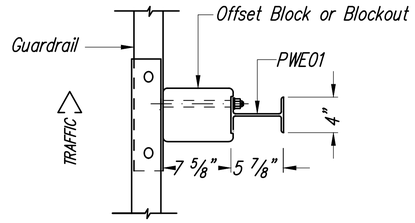

PLAN

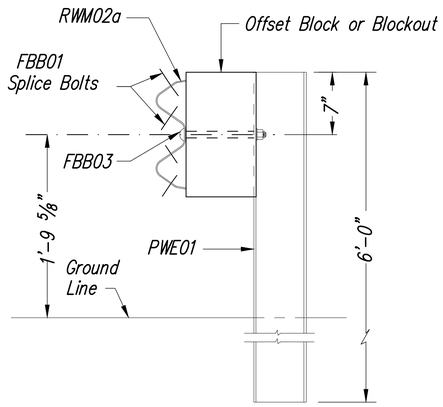

ELEVATION

STRONG POST W-BEAM GUARDRAIL

(SGR04a)

NOTE:
All Holes are
3/4" Dia.

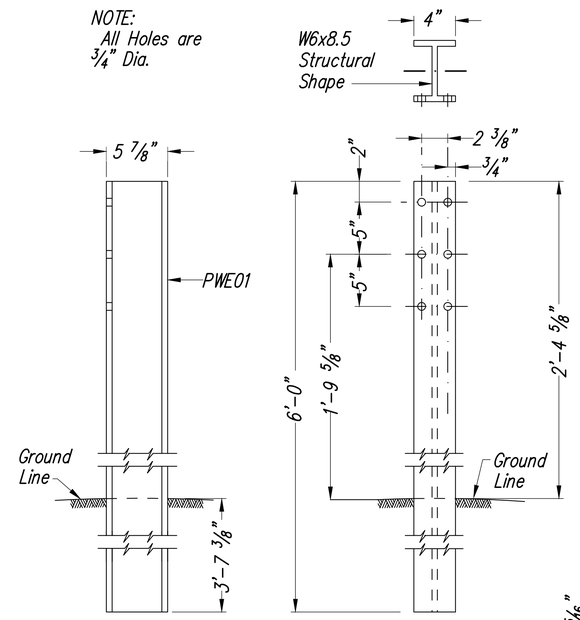

SIDE

FRONT

W-BEAM STRONG POST (PWE01)

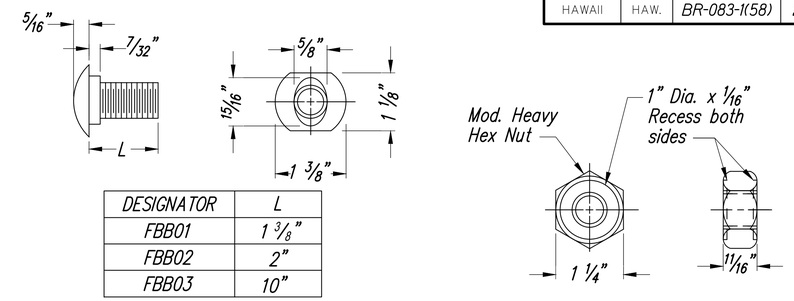

DESIGNATOR	L
FBB01	1 3/8"
FBB02	2"
FBB03	10"

GUARDRAIL BOLTS AND RECESSED NUT

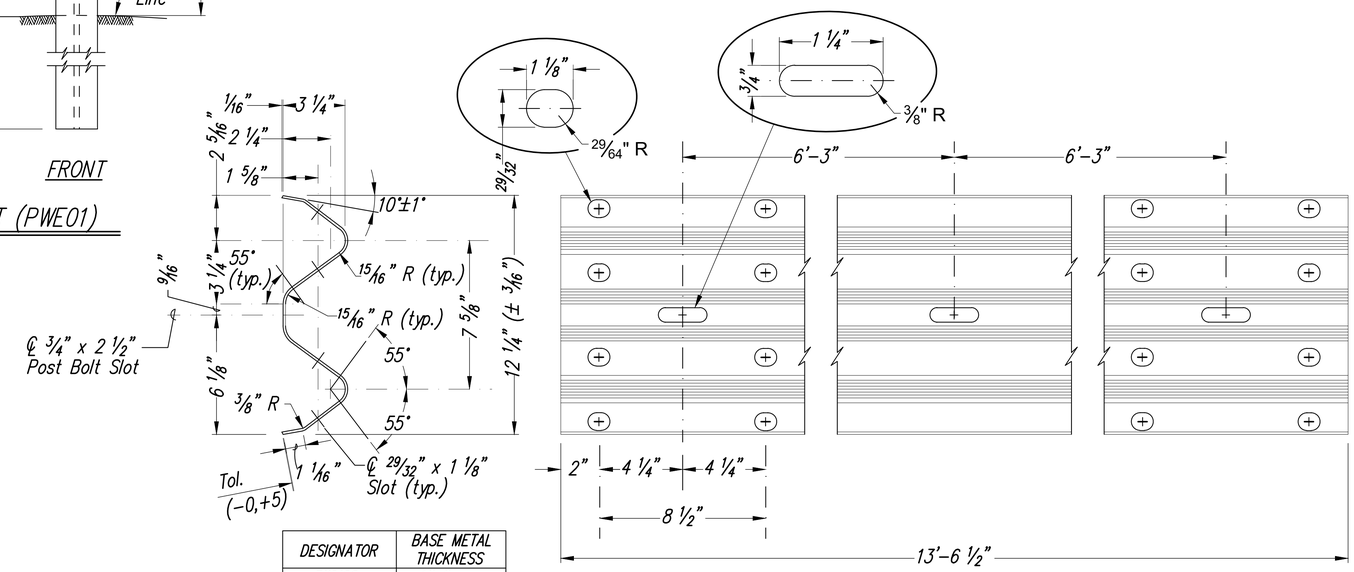

DESIGNATOR	BASE METAL THICKNESS
RWM02a	12 Gauge

2 SPACE W-BEAM GUARDRAIL (RWM02a)

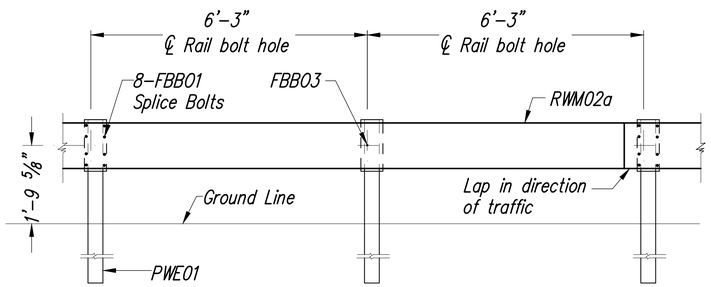

ELEVATION

STRONG POST W-BEAM GUARDRAIL WITH

RECYCLED OFFSET BLOCK OR PLASTIC BLOCKOUT

ORIGINAL PLAN | SURVEY PLOTTED BY ____ DATE ____
DRAWN BY ____
TRACED BY ____
NOTE BOOK DESIGNED BY ____
QUANTITIES BY ____
No. ____ CHECKED BY ____

MINGXUN DING
LICENSED PROFESSIONAL ENGINEER
NO. 9246-C
HAWAII, U.S.A.

LICENSE EXPIRES 4/30/24

THIS WORK WAS PREPARED BY ME OR UNDER MY SUPERVISION

STATE OF HAWAII
DEPARTMENT OF TRANSPORTATION
HIGHWAYS DIVISION

STRONG POST W-BEAM
GUARDRAIL DETAIL
KAMEHAMEHA HIGHWAY
Laieloa Stream Bridge Replacement
Federal-Aid Project No. BR-083-1(58)

Scale: As Shown Date: September 2023

SHEET No. 1 OF 1 SHEETS

FED. ROAD DIST. NO.	STATE	FED. AID PROJ. NO.	FISCAL YEAR	SHEET NO.	TOTAL SHEETS
HAWAII	HAW.	BR-083-1(58)	2023	46	129

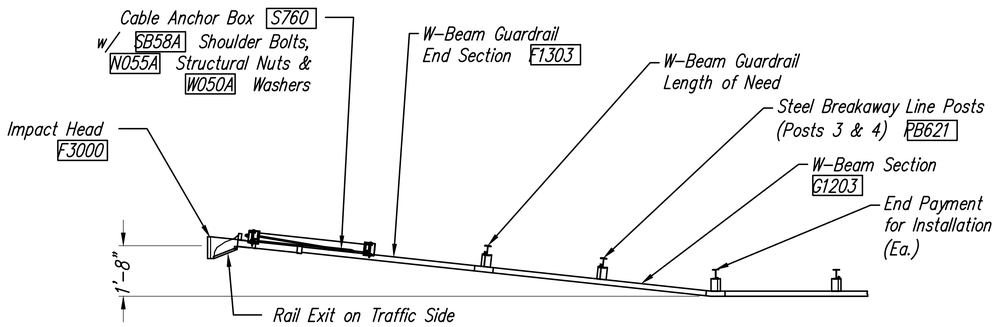

PLAN

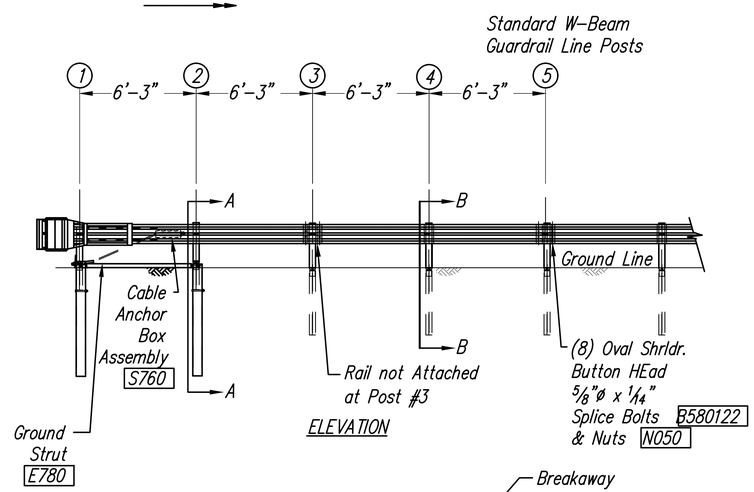

ELEVATION

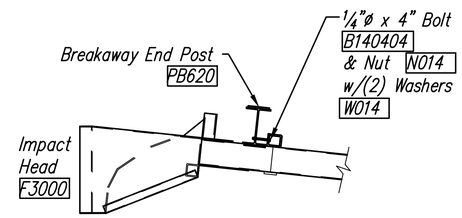

IMPACT HEAD CONNECTING DETAIL

GENERAL NOTES:

1. Breakaway steel posts are required with the FLEAT Terminal.
2. All bolts, nuts, cable asemblies, cable anchors and bearing plates shall be galvanized.
3. The soil tube shall not protrude more than 4" above ground (measured along a 5' cord). Site grading may be necessary to meet this requirement.
4. The soil tubes may be driven with an approved driving head. They shall not be driven with the post in the tube. If the soil tubes are placed in dirlled holes, the backfill material must be satisfactorily compacted to prevent settlement.
5. When rock is encountered during excavation, a 12" Dia. post hole, 20" deep may be used if approved by the Engineer. Granular material will be placed in the bottom of the hole approx. 2 1/2" deep to provide drainage. The soil tubes will be field cut to length, placed in the hole and backfilled with adequately compacted material excavated from the hole.
6. The breakaway cable assembly must be taut. A locking device, (vice grips or channel lock pliers) should be used to prevent the cable from twisting when tightening nuts.
7. (R) or (L) indicates right or left Impact Head Reflector Marker (IHRM). Providing and installing of IHRM shall be considered incidental to end treatment.
8. The stripes for IHRM shall slope downward at an angle of 45° towards the side of the end treatment that traffic is to pass.

ITEM NO.	QTY.	BILL OF MATERIALS
F3000	1	IMPACT HEAD
G1203	1	W-BEAM GUARDRAIL END SECTION, 12 GA.
F1304	1	W-BEAM GUARDRAIL CENTER SECTION, 12 GA.
S730	2	*FOUNDATION SOIL TUBE, 6" x 8" x 6'-0"
E750	1	BEARING PLATE, 8" x 8" x 5/8"
S760	1	CABLE ANCHOR BOX
E770	1	BCT CABLE ANCHOR ASSEMBLY
E780	1	GROUND STRUT
PB620	2	BREAKAWAY END POST
PB621	3	BREAKAWAY LINE POST
	2	RECYCLED PLASTIC BLOCKOUT OR OFFSSET BLOCK
	1	IMPACT HEAD REFLECTOR MARKER - IHRM(R) OR (L)
		HARDWARE
B580122	17	5/8" Dia. x 1 ," SPLICE BOLT, POST #2
B580754	2	5/8" Dia. x 7 1/2" HEX BOLT
B341004	2	3/4" Dia. x 10" HEX BOLT
B581002	3	5/8" Dia. x 10" H.G.R. BOLT (POSTS 3 & 4)
N030	2	3/4" Dia. HEX NUT
N050	21	5/8" Dia. H.G.R. NUT (SPLICE 16, SOIL TUBES 2, POSTS 2, 1; POSTS 3 & 4, 3)
W030	4	3/4" I.D. WASHER
W050	3	H.G.R. WASHER
N100	2	1" ANCHOR CABLE HEX NUT
W100	2	1" ANCHOR CABLE WASHER
B140404	2	1/4" x 4" HEX BOLT
N014	2	1/4" HEX NUT
W014	4	1/4" WASHER
SB58A	8	CABLE ANCHOR BOX SHOULDER BOLT
N055A	8	1/2" A325 STRUCTURAL NUT
W050A	16	1 1/16" OD X 3/16" ID A325 STR. WASHER

Foundation Tube Options For Posts 1 & 2
*6'-0" Split Foundation Tube S730
*6'-0" Solid Foundation Tube E731
*5'-0" Foundation Tube S735 W/Soil Plate SP600
*4'-6" Foundation Tube E735 W/Soil Plate SP600

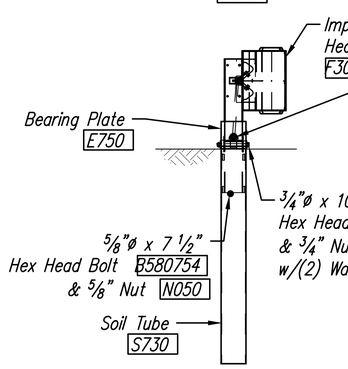

FRONT VIEW OF POST 1

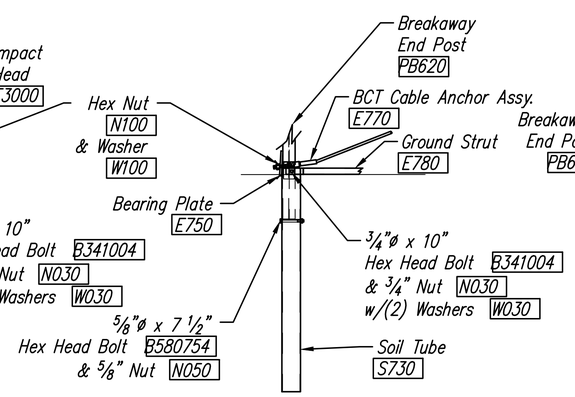

PARTIAL VIEW OF POST 1

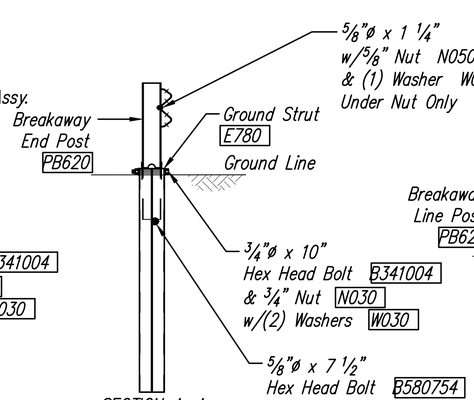

SECTION A-A
at Post #2

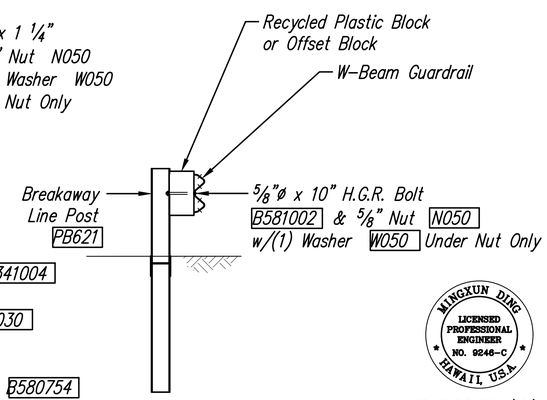

SECTION B-B
Typical @ Post 3 & 4
Note: Rail not Bolted @ Post 3

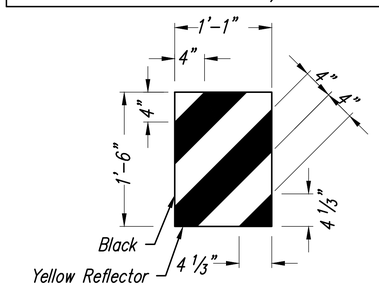

IHRM(R)
IMPACT HEAD REFLECTOR MARKER INSERT DETAIL

MINGXUN DING
LICENSED PROFESSIONAL ENGINEER
NO. 9246-C
HAWAII, U.S.A.

LICENSE EXPIRES 4/30/24

THIS WORK WAS PREPARED BY ME OR UNDER MY SUPERVISION

STATE OF HAWAII
DEPARTMENT OF TRANSPORTATION
HIGHWAYS DIVISION

FLEAT TL-2 FLARED ENERGY ABSORBING TERMINAL DETAIL

KAMEHAMEHA HIGHWAY
Laieloa Stream Bridge Replacement
Federal-Aid Project No. BR-083-1(58)

Scale: As Shown Date: September 2023

SHEET No. 1 OF 1 SHEETS

ORIGINAL PLAN | SURVEY PLOTTED BY | DRAWN BY | TRACED BY | DESIGNED BY | QUANTITIES BY | CHECKED BY | DATE
NOTE BOOK No.

STRUCTURAL GENERAL NOTES:

General:

A. Workmanship and materials shall conform to the following design specifications:
   1. AASHTO LRFD Bridge Design Specifications, 9th Edition, 2020 including all interim revisions.
   2. State of Hawaii, Department of Transportation, Highways Division, Design Criteria for Bridges and Structures, August 8, 2014 as amended by HWY-DB 2.5098, Changes to Design Criteria for Bridges and Structures, January 8, 2018.
   3. AASHTO LRFD Specifications for Structural Supports for Highway Signs, Luminaires and Traffic Signals, 1st Edition, 2016 including all interim revisions.
   4. AASHTO Manual for Assessing Safety Hardware, 2nd Edition, 2016.
   5. AASHTO Manual for Bridge Evaluation, 3rd Edition, 2018 including all interim revisions and requirements for emergency vehicle ratings as per FHWA's Memorandum, Load Rating for the FAST Act's Emergency Vehicles, November 3, 2016 as modified by "Draft Modifications to the "Design Criteria for Bridges and Structures, August 8, 2014" for the Manual for Bridge Evaluation 2nd Edition".
   6. Hawaii Standard Specifications for Road and Bridge Construction (2005 Edition) and Special Provisions.

B. The contractor shall compare all the contract documents with each other and report in writing to the engineer all inconsistencies and omissions.

C. The contractor shall take field measurements and verify field conditions and shall compare such field measurements and conditions with the drawings before commencing work. Report in writing to the engineer all inconsistencies and omissions.

D. The contractor shall be responsible for coordinating the work of all trades.

E. The contractor shall be responsible for means and methods of construction, workmanship and job safety.

F. The contractor shall provide temporary shoring and bracing as required for stability of structural members and systems.

G. Construction loading shall not exceed design live load unless special shoring is provided. Permitted construction loads shall be properly reduced in areas where the structure has not attained full design strength.

H. The contractor shall be responsible for protection of the adjacent properties, structures, streets and utilities during the construction period. Any damaged or deteriorated property shall be restored to the condition prior to the beginning of work or better at no cost to the State.

I. Details noted as typical on the structural drawings shall apply in all conditions unless specifically shown or noted otherwise.

J. Elevations and details of the existing bridges and other miscellaneous structures as shown on these plans are based on as-built drawings. The contractor shall be responsible for verifying all existing elevations and existing structure details and shall notify the engineer in writing of any discrepancies for further action.

K. Except as noted otherwise, all vertical dimensions are measured plumb.

Design Criteria:

A. Dead load
   - Weight of all components of the structures, appurtenances attached thereto, and earth covers.
   - Unit weight of concrete ---------- 160 pcf
   - Compacted earth ---------- 120 pcf
   - Future wearing surface ---------- 25 psf
   - Future utilities on each bridge railing ---------- 150 plf

B. Live load ---------- AASHTO HL-93

C. Collision load ---------- AASHTO TL-2

D. Seismic
   - 0.2-second spectral response coefficient, s_s ---------- 0.378
   - 1.0-second spectral response coefficient, s_1 ---------- 0.103
   - Peak seismic ground acceleration coefficient, A_s ---------- 0.180
   - Site class ---------- C
   - Seismic design zone ---------- 2

E. Basic wind speed ---------- 130 MPH

F. Design soil parameters for structures
   - Bearing capacity
     - Extreme event limit state ---------- 9,000 psf
     - Strength limit state ---------- 4,000 psf
   - Passive earth pressure
     - Extreme event limit state ---------- 275 pcf
     - Strength limit state ---------- 138 pcf
   - Lateral earth pressure
     - Active (level backfill) ---------- 37 pcf
     - At-rest (level backfill) ---------- 54 pcf
   - Dynamic lateral earth pressure
     - Unrestrained ---------- $6.5H^2$ psf
     - Restrained ---------- $12.0H^2$ psf
   - Coefficient of Friction
     - Extreme event limit state ---------- 0.35
     - Strength limit state ---------- 0.28

Foundation:

A. Foundation design is based upon Geotechnical Investigation by Geolabs Inc., dated September 27, 2021.

B. Contractor shall provide for de-watering of excavation from either surface water, ground water or seepage. NPDES permit required for discharging into state waters.

C. Contractor shall provide for design and installation of all cribbing, sheeting, and shoring necessary for personnel safety and to preserve excavations and earth banks, and adjacent structures and property for damage for owner review. Design shall be by a civil engineer specializing in geotechnical engineering and a structural engineer both shall be licensed in the State of Hawaii. Submit stamped drawing and calculations to the Engineer. Shoring shall comply with HIOSH and OSHA regulations. Excavation boundaries and grade elevations for footing shall be accepted by a geotechnical engineer licensed in the State of Hawaii prior to placing the concrete and reinforcing.

D. Footings shall bear on a 6-inch layer of aggregate base course compacted to a minimum of 95% relative density in accordance with ASTM D1557. Prior to the placement of the aggregate base course, the exposed soils should be scarified to a depth of 6-inches, moisture conditioned to within 2% of optimum moisture and compacted to no less than 90% relative density in accordance with ASTM D1557. Bottom of footing shall be compacted to provide a relatively firm and smooth bearing surface prior to placement of reinforcing steel and concrete. If soft and/or loose materials are encountered at the bottom of excavations, they shall be over-excavated to expose the underlying firm materials. The over-excavated area shall be backfilled with the same aggregate base course or the footing bottom may be extended down to the underlying competent material. Contractor may substitute CLSM for the aggregate base course upon acceptance from the engineer.

E. Backfill shall be Structural Backfill Material A in accordance with Section 703.20 of the Hawaii Standard Specifications for Road and Bridge construction, 2005 Edition.

Concrete:

A. Concrete shall be regular weight hard rock concrete and shall have the following minimum 28-day compressive strengths and water to cement ratios:

Structural Item	Minimum Compressive Strength f'c (28 days)	Maxmium (W/C)
1. Prestressed planks	8,000 psi	0.35
2. Deck topping	4,000 psi	0.45
3. Abutment, end walls, caps	4,000 psi	0.45
4. Drilled shafts	4,500 psi	0.45
5. Traffic railing, end posts, approach slabs	4,000 psi	0.45
6. CLSM	300 psi	--
7. All other concrete	4,000 psi	0.45

B. The use of any calcium chloride in any concrete is prohibited.

C. Concrete delivery tickets shall record all free water in the mix at batching plant, added for consistency by driver, and any additional request by contractor up to the maximum amount allowed by the mix design.

D. Conduits, pipes, and sleeves passing through a wall not conforming to typical details shall be located and submitted to the structural engineer for approval.

E. Construction joints may be requested to be relocated by the contractor and submit request to its structural engineer for approval. Submit stamped and signed drawings and calculations to the Engineer for acceptance. Construction joints shall be made and relocated as not to impair the durability, strength of the structure and to minimize shrinkage stresses. All construction joints shall be cleaned, laitance removed and wetted. See typical details for specific requirements.

F. Unless otherwise noted, chamfer all exposed concrete edges 3/4".

G. Reinforcing bars, anchor bolts, inserts and other items to be cast in the concrete shall be secured in position prior to placement of concrete.

H. All inserts, anchor bolts, plates, and other structural items to be cast in the concrete shall be hot-dip galvanized according to ASTM A153 unless otherwise noted.

I. Non-shrink grout shall be a premixed non-metallic formula, capable of developing a minimum compressive strength of 4,000 psi in 1 day and 7,000 psi in 28 days.

J. A shrinkage reducing admixture (SRA), Tetraguard AS20 by BASF, Eclipse by W.R. Grace & Co, or an approved equal shall be added to the concrete. The minimum dosage requirement shall be 128 oz per cubic yard of concrete. The concrete shall have a maximum shrinkage strain of 0.00006 at 28 days and 0.000145 at 56 days according to ASTM C512.

K. A corrosion inhibiting admixture shall be included in the concrete mix for all concrete. The corrosion inhibiting admixture shall contain a minimum of 30% calcium nitrate by mass and shall be added at a dosage rate of 4.0 gallons per cubic yard of concrete or as recommended by the manufacturer. The admixture shall be Masterline CI 30 Calcium Nitrate-Based corrosion inhibitor, DCI S corrosion inhibitor or an approved equal. Addition of corrosion inhibiting admixture shall be as recommended by the manufacturer.

L. Stay-in-place forms shall not be allowed.

JERRY S FUJITA
LICENSED PROFESSIONAL ENGINEER
No. 11573-S
HAWAII, U.S.A.

LICENSE EXPIRES 4/30/24

THIS WORK WAS PREPARED BY ME OR UNDER MY SUPERVISION

STATE OF HAWAII
DEPARTMENT OF TRANSPORTATION
HIGHWAYS DIVISION

STRUCTURAL GENERAL NOTES - 1

KAMEHAMEHA HIGHWAY
Laieloa Stream Bridge Replacement
Federal-Aid Project No. BR-083-1(58)

Scale: As Noted Date: September 2023

SHEET No. S0.1 OF 129 SHEETS

ORIGINAL PLAN | SURVEY PLOTTED BY ___ DATE ___
DRAWN BY ___
TRACED BY ___
NOTE BOOK | DESIGNED BY ___
QUANTITIES BY ___
No. ___ | CHECKED BY ___

PLOT DATE: September 19, 2023 @ 01:46:56 pm
LAST UPDATE: September 19, 2023 @ 10:21:02 am
PATH/FILENAME: C:\Users\tamanaha\AppData\Local\Temp\AcPublish_11544\1754_S0-1 - S0-4.dwg

1754 Laieloa Stream Bridge - M&E Pacific\Drawings\Structural\AutoCAD_format\2023-03-15\1754_S0-1 - S0-4.dwg, 9/19/2023 1:46:55 PM, tamanaha

FED. ROAD DIST. NO.	STATE	FED. AID PROJ. NO.	FISCAL YEAR	SHEET NO.	TOTAL SHEETS
HAWAII	HAW.	BR-083-1(58)	2023	48	129

STRUCTURAL GENERAL NOTES:

Reinforcing Steel:

A. Deformed and Plain Carbon Steel Bars for Concrete Reinforcement shall meet the requirements of AASHTO M31M/M31-19, Grade 60 (ASTM A615/ A615M-16, Grade 60).
B. Deformed and Plain Carbon Steel Bars for Concrete Reinforcement to be spliced by welding or otherwise welded, such as welded hoops, or for seismic reinforcing shall meet the requirements of AASHTO M31M/M31-19, Grade 60 (ASTM A615/ A615M-16, Grade 60) and meet the requirements of ASTM A706/A706M-16.
C. The welding of reinforcing steel shall be in accordance with the Structural Welding Code-Reinforcing Steel AWS D1.4.
D. Epoxy-coated dowels and deformed bars shall conform to ASTM A775, Grade 60 unless otherwise noted.
E. The contractor shall not damage the epoxy coating on the dowels and deformed bars in any way during shipment, handling, or placement. Damaged epoxy coated dowels and deformed bars shall be replaced at no cost to the State. Repair of epoxy coating as approved by the Engineer shall meet ASTM A775.
F. Clear concrete cover for reinforcing bars shall be as follows, unless otherwise noted:
   1. Footing, walls, etc, cast against earth — 3"
   2. Exterior concrete in coastal region — 3"
   3. Exterior concrete other than above — 2"
   4. Bridge Deck
      a. Top reinforcement — 2½"
      b. Bottom reinforcement — 1½"

   Measured to the closest part of the bars.
G. At the time concrete is placed, reinforcing shall be free from mud, oil, laitance or other coatings which may adversely affect bond strength.
H. Minimum clear spacing between parallel bars shall be one and one-half (1½") times the diameter of the larger bar (for non-bundled bars), but in no case shall the clear distance between the bars be less than one and one-half (1½") times the maximum coarse aggregate size.
I. All dimensions relating to reinforcing bars (e.g. spacing of bars etc.) are to centers of bars unless noted otherwise.
J. Reinforcing steel shall be spliced only where indicated on plans. Provide lap splice length per typical details and schedule, unless otherwise noted.
K. Mechanical splice connectors shall develop, in tension, 125 percent of the specified minimum yield strength of reinforcing bars.
L. Stagger all splices where possible.
M. Bar bends and hook shall be "standard hooks" in accordance with typical details.
N. Minimum reinforcement bend diameters shall comply with AASHTO 5.10.2.3.

Structural Steel:

A. Fabrication and erection of structural steel shall conform to the American Institute of Steel Construction Manual of Steel Construction, Fourteenth Edition.
B. All structural steel in this section, except for stainless steel, shall be hot-dip galvanized after fabrication.
C. Zinc (Hot-Dip Galvanizing) Coatings for structural iron and steel products made from rolled, pressed and forged shapes, castings, bars and plates including unfabricated and fabricated products shall conform to ASTM A123 unless otherwise noted.
D. Any damaged galvanized surface shall be repaired as follows:
   1. Prepare surface per SSPC-SP1, solvent cleaning.
   2. Apply two coats of cold applied galvanizing compound containing 95% metallic zinc content by weight in dry film and 52% solids content by volume.
   3. Application rate shall be 1.5 mils dry film thickness per coat.
E. Structural steel shall conform to ASTM A36 unless otherwise noted.
F. Steel wide flange sections shall conform to ASTM A992.
G. Steel pipes shall conform to ASTM A53, Grade B.
H. Steel tubes (HSS) shall conform to ASTM A500, Grade B
I. Plates and bars shall conform to ASTM A36.
J. Stainless steel bars and shapes shall conform to ASTM A276, Type 316L.
K. Stainless steel plates shall conform to ASTM A240, Type 316L.
L. Stainless steel sheets shall conform to ASTM A666, Type 316L.
M. Welds and welding procedures shall conform to the structural welding codes AWS D1.5 and D1.6 of the American Welding Society.
N. Welding shall be performed by welders prequalified for welding procedures to be used.
O. Welding electrodes shall be E70XX and E316.
P. Fasteners:
   1. Bolts (Hex or Heavy Hex Bolts) shall conform to ASTM A307, Grade A unless otherwise specified and hot-dip galvanized in accordance with ASTM F2329.
      Hex Nuts for ASTM A307 hex bolts shall conform to ASTM A563, Hex Grade A and hot-dip galvanized in accordance with ASTM F2329.
      Heavy Hex Nuts for ASTM A307 heavy hex bolts shall conform to ASTM A563, Heavy Hex Grade DH and hot-dip galvanized in accordance with ASTM F2329.
      Washers for ASTM A307 bolts shall conform to ASTM F844 and hot-dip galvanized in accordance with ASTM F2329.
   2. High Strength Bolts (Heavy Hex Structural Bolts) shall conform to ASTM F3125, Grade A325, Type 1 unless otherwise specified and hot-dip galvanized in accordance with ASTM F2329.
      Nuts for ASTM F3125 bolts shall conform to ASTM A563, Grade DH and hot-dip galvanized in accordance with ASTM F2329.
      Washers for ASTM F3125 bolts shall conform to ASTM F436, Type 1 and hot-dip galvanized in accordance to ASTM F2329.
   3. Threaded Rods shall conform to ASTM A449, Type 1 and hot-dip galvanized in accordance to ASTM F2329.
      Nuts for ASTM A449 threaded rods shall conform to ASTM A563, Grade DH and hot-dip galvanized in accordance to ASTM F2329.
      Washers for ASTM A449 threaded rods shall conform to ASTM F436, Type 1 and hot-dip galvanized in accordance to ASTM F2329.
   4. Anchor Bolts shall conform to ASTM F1554, Grade (36, 55, 105) and hot-dip galvanized in accordance to ASTM F2329.
      Nuts for anchor bolts shall conform to ASTM F1554, Section 6.7.1 and hot-dip galvanized in accordance to ASTM F2329.
      Washers for anchor bolts shall conform to ASTM F436, Type 1 and hot-dip galvanized in accordance to ASTM F2329.
   5. The material for the 3" x 3" x ¼" or 3½" x 3½" x ¼" square washers shall conform to ASTM A572, Grade 60.
   6. Stainless Steel Bolts shall conform to ASTM A193, Grade B8M or ASTM F593, Alloy Group 2, Condition A or CW unless otherwise specified.
      Nuts for ASTM stainless steel bolts shall conform to ASTM A194, Grade 8M or ASTM F594, Alloy Group 2, Condition A or CW and shall match the corresponding bolt specification, grade, alloy group, and condition.
      Washers for stainless steel bolts shall be Type 316 Stainless Steel.
Q. Installation of the high-strength bolts shall be assured by any of the following methods.
   1. Turn of nut method
   2. Direct tension indicator
   3. Calibrated wrench
   4. Alternative design bolt
R. Thru bolts for guardrail connection shall conform to AASHTO M164 (ASTM F3125, Grade A325, Type 1), unless otherwise noted.
S. Anchor bolts shall have sufficient length when installed to ensure that the bolt projects at least ⅛" beyond the top of the nut but should not project more than ¼". Anchor bolts shall not be out of plumb more than 1:40 Horizontal: Vertical.
T. Bolts and high strength bolts shall have sufficient length when installed to ensure that the bolt projects at least ⅛" beyond the nut but should not project more than ¼".
U. Stainless steel shall not come into contact with carbon steel.
V. Thrie Beam Sections, W-Beam Sections and Thrie Beam to W-Beam Asymmetric Transition Sections shall conform to AASHTO M180-18.
W. The Thrie Beam Terminal Connections shall be 10 gauge and conform to AASHTO M180-18 and have a minimum yield strength of 50 ksi and a minimum ultimate strength of 70 ksi.
X. All stainless steel shall be passivated after fabrication.
Y. Passivation of stainless steel products shall conform to ASTM A967 unless otherwise noted.

Miscellaneous Materials:

A. Preformed Expansion Joint Filler for Concrete (Bituminous Type) shall conform to AASHTO M33-99 (2012), ASTM D994-11 (2016).
B. 14 3/16" x 12" x 5⅛" Composite Recycled Polymer Blockouts shall be Mondo Polymer MGS14SH or MASH (2016) approved equivalent.
C. 14 3/16" x 8" x 5⅛" Composite Recycled Polymer Blockouts shall be Mondo Polymer GB14SH2 or MASH (2016) approved equivalent.

ORIGINAL PLAN	SURVEY PLOTTED BY	DATE
	DRAWN BY	
	TRACED BY	
NOTE BOOK	DESIGNED BY	
	QUANTITIES BY	
No.	CHECKED BY	

PLOT DATE: September 19, 2023 @ 01:46:56 pm
LAST UPDATE: September 19, 2023 @ 10:21:02 am
PWD/FILENAME: C:\Users\tamanaha\AppData\Local\Temp\AcPublish_11544\1754_S0-1 - S0-4.dwg
1754 Laieloa Stream Bridge - M&E Pacific\Drawings\Structural\AutoCAD_format\2023-03-15\1754_S0-1 - S0-4.dwg, 9/19/2023 1:46:57 PM, tamanaha

LICENSED PROFESSIONAL ENGINEER No. 11573-S JERRY S. FUJITA HAWAII, U.S.A.

LICENSE EXPIRES 4/30/24

THIS WORK WAS PREPARED BY ME OR UNDER MY SUPERVISION

STATE OF HAWAII
DEPARTMENT OF TRANSPORTATION
HIGHWAYS DIVISION

STRUCTURAL GENERAL NOTES - 2

KAMEHAMEHA HIGHWAY
Laieloa Stream Bridge Replacement
Federal-Aid Project No. BR-083-1(58)

Scale: As Noted — Date: September 2023

SHEET No. S0.2 OF 129 SHEETS

FED. ROAD DIST. NO.	STATE	FED. AID PROJ. NO.	FISCAL YEAR	SHEET NO.	TOTAL SHEETS
HAWAII	HAW.	BR-083-1(58)	2023	49	129

SYMBOLS AND ABBREVIATIONS:

Detail or Section designation — XXX / XXX | XXX

Sheet No. Section is cut or Detail Location

Sheet No. Detail is drawn

(XX) - ℄ Bearing Abutment Seat Line

⊕ - Boring No. ⊕ Designation

Abut.	Abutment
AC	Asphaltic Concrete
Adj.	Adjacent
Alt.	Alternate
Appro.	Approximate
Az.	Azimuth
₥	Baseline
Bal.	Balance
Bet., Btwn.	Between
B.F.	Both faces
BF.E.	Bottom Footing Elevation
Bl.	Back
Blt.	Bolt
Bm.	Beam
B, Bot., Bott.	Bottom
Br.	Bridge
Brg., Brgs.	Bearing, Bearings
B.V.C.	Beginning of Vertical Curve
℄	Center Line
Cant.	Cantilever
C.F.	Cubic Feet
Cip	Cast in Place
C.I.P.	Cast Iron Pipe
C.i., Clr.	Clear
Col.	Column
Conc.	Concrete
Conn.	Connection
Const.	Construction
Cont.	Continuous
CRM	Cement Rubble Masonry
C.Y., Cu. Yd.	Cubic Yard
Det.	Detail
Dia., ø	Diameter
Dim.	Dimension
Dwg,. Dwgs.	Drawing, Drawings
EA., Ea., ea.	Each
E.F.	Each Face
Elec.	Electrical
El., Elev.	Elevation
Emb.	Embankment
E.P.	Edge of Pavement
Eq.	Equal
Est.	Estimated
E.W.	Each Way
Exc.	Excavation
Exist.	Existing
Exp., (E)	Expansion
Ext.	Exterior
(F)	Fixed
F'c	Specified Strength of Concrete
F'ci	Strength of Concrete at Time of Initial Prestress
F.F.	Front Face
Fig.	Figure
Fin.	Finish
Fin. Gr.	Finish Grade
Ftg.	Footing
Ga.	Gage, Gauge
Galv.	Galvanized
Gir., G	Girder
G.R.P.	Grouted Rubble Paving
Gr.	Grade
Grd.	Ground
(H)	Hinge
Horiz.	Horizontal
HS	High Strength
Ht.	Height
Hwy.	Highway
I.B.	Inbound
I.F.	Inside Face
In.	Inch
Int.	Interior
Inv.	Invert
Jt.	Joint
L	Length
LBS., lb., lbs.	Pound, Pounds
L.F., Lin. Ft.	Linear Feet
Lg.	Long
Longit.	Longitudinal
L.S.	Lump Sum
Lt.	Left
Ltg. Std.	Lighting Standard
Max.	Maximum
Mech.	Mechanical
Min.	Minimum
Misc.	Miscellaneous
N	North
N.B.	Northbound
N.F.	Near Face
No., #	Number
N.T.S.	Not to Scale
O.B.	Outbound
o.c.	On Center
O.G.	Outside Girder
Opn'g	Opening
o/s, O/S	Offset
P.B.	Pull Box
P.C.	Point of Curvature
P.C.C	Portland Cement Concrete
Perf.	Perforated
PG-()	Prestressed Girder-(Type)
PL	Plate
P/S	Prestressed Strands
Pvmt.	Pavement
R	Radius
Rdwy	Roadway
Ref.	Reference
Reinf.	Reinforcement
Ret.	Retaining
Req'd	Required
R.F.	Rear Face
Rt.	Right
R/W	Right Of Way
S	South
S.B.	Southbound
Sect.	Section
SF	Square Feet
Shldr.	Shoulder
Sht.	Sheet
Spc.	Space
Spcd.	Spaced
Spcg.	Spacing
Spec.	Specification
Sprd.	Spread
Sta.	Station
Std.	Standard
Stirr.	Stirrup
Str.	Straight
Struct.	Structural
Symm.	Symmetrical
T	Top
Temp.	Temporary
Thk.	Thick, Thickness
T.O.D.	Top Of Deck
Tot.	Total
Transv.	Transverse
Typ.	Typical
Var.	Varies
V.C.	Vertical Curve
Vert.	Vertical
W	West
w/	With
W.W.	Wingwall

BRIDGE LOAD CAPACITY RATING SUMMARY

Design Load	Rating Factor	Controlling Member	Controlling Load Effect	Live Load Distribution Factor
HL-93 Inventory	2.16	Exterior Plank	Tension Stress	0.362
HL-93 Operating	2.65	Exterior Plank	Tension Stress	0.362

JERRY S FUJITA LICENSED PROFESSIONAL ENGINEER No. 11573-S HAWAII, U.S.A.

LICENSE EXPIRES 4/30/24

THIS WORK WAS PREPARED BY ME OR UNDER MY SUPERVISION

STATE OF HAWAII
DEPARTMENT OF TRANSPORTATION
HIGHWAYS DIVISION

STRUCTURAL
GENERAL NOTES - 3

KAMEHAMEHA HIGHWAY
Laieloa Stream Bridge Replacement
Federal-Aid Project No. BR-083-1(58)

Scale: As Noted Date: September 2023

SHEET No. S0.3 OF 129 SHEETS

ORIGINAL PLAN — SURVEY PLOTTED BY ___ DATE; DRAWN BY ___; TRACED BY ___; DESIGNED BY ___; QUANTITIES BY ___; CHECKED BY ___; NOTE BOOK No. ___

PLOT DATE: September 19, 2023 @ 01:46:58 pm

LAST UPDATE: September 19, 2023 @ 10:21:02 am

PATH/FILENAME: C:\Users\tamanaha\AppData\Local\Temp\AcPublish_11544\1754_S0-1 - S0-4.dwg

1754 Laieloa Stream Bridge - M&E Pacific\Drawings\Structural\AutoCAD_format\2023-03-15\1754_S0-1 - S0-4.dwg, 9/19/2023 1:46:58 PM, tamanaha

FED. ROAD DIST. NO.	STATE	FED. AID PROJ. NO.	FISCAL YEAR	SHEET NO.	TOTAL SHEETS
HAWAII	HAW.	BR-083-1(58)	2023	50	129

MINIMUM SPLICE & EMBEDMENT LENGTHS

	Lap Splice		Embedment		
			Straight		with Standard 90° Hook
Bar Size	Top Bars	Other Bars	Top Bars	Other Bars	
#3, #4	30"	23"	23"	18"	10"
#5	37"	29"	29"	22"	12"
#6	44"	34"	34"	26"	14"
#7	56"	43"	43"	34"	16"
#8	74"	57"	57"	44"	19"
#9	93"	72"	72"	55"	21"

Notes:
1. "Top Bars" are horizontal bars with 12" or more of concrete cast below.
2. Splice lengths may be reduced by multiplying the tabulated values by 0.765 if the centerline of splice of adjacent bars are staggered 6'-0" o.c. for #9 bars and smaller.
3. Embedment lengths for straight bars may be reduced by multiplying the tabulated values by 0.80 if the bars are spaced laterally not less than 6" center-to-center, with not less than 3" clear cover measured in the direction of the spacing.
4. Embedment lengths for bars with 90° hook are bars with side cover, normal to plane of hook, of not less than 2½" and cover on bar extension beyond hook not less than 2". Increase embedment length by 43% for bars not meeting these requirements.

TYPICAL REBAR SPLICE AND EMBEDMENT LENGTH SCHEDULE

Not to Scale

1 / S0.4 | S0.4

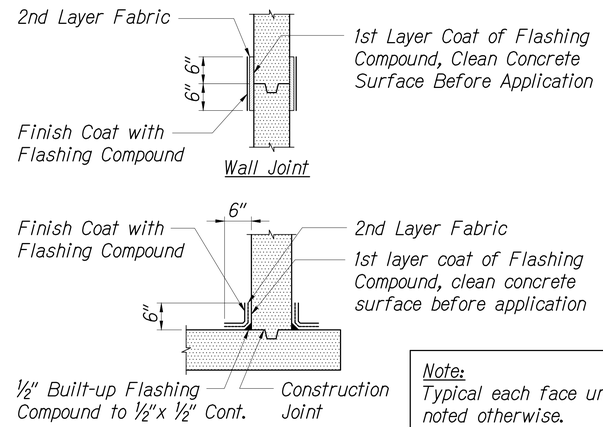

Note:
Typical each face unless noted otherwise.

TYPICAL WATERPROOFING DETAIL

Not to Scale

3 / S0.4 | S0.4

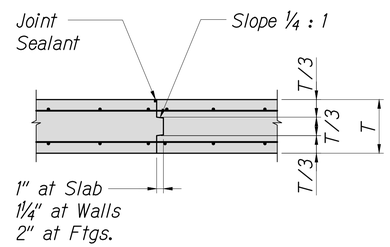

TYPICAL JOINT DETAILS

Not to Scale

4 / S0.4 | S0.4

Anchor Detail Notes:
1. Anchor components for pipe bracket shall be Type 316 Stainless Steel.
2. Embedded stainless steel anchors shall not come into contact with any carbon steel reinforcing. The anchors shall be secured in place by non-metallic reinforcing bars, clips, or ties.
3. Maximum center-to-center spacing for anchor groups shall be 6'-3".
4. Anchor groups shall not be placed within 9" of any joint in the concrete

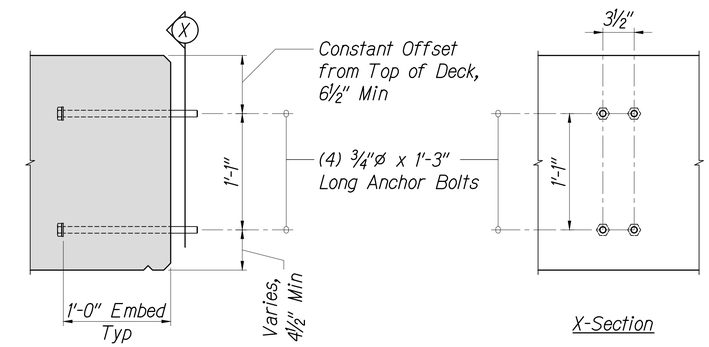

AT PIPE BRACKET CONNECTION

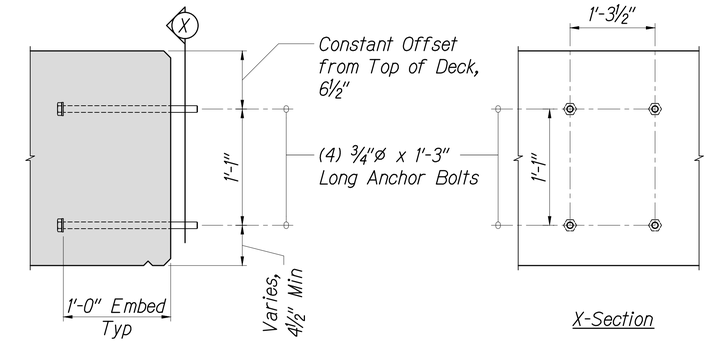

AT ARV PROTECTIVE ENCLOSURE

TYPICAL ANCHOR DETAIL FOR PIPE BRACKET CONNECTION AND ARV PROTECTIVE ENCLOSURE

Not to Scale

5 / S0.4 | S0.4

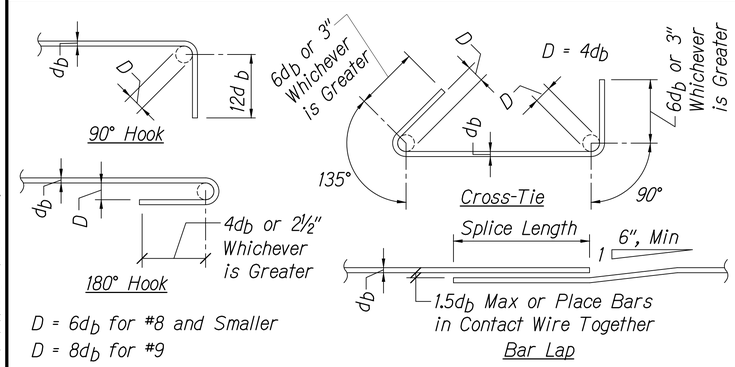

D = $6d_b$ for #8 and Smaller
D = $8d_b$ for #9

STANDARD HOOKS AND CROSS-TIE DETAIL

Not to Scale

2 / S0.4 | S0.4

ORIGINAL PLAN	SURVEY PLOTTED BY	DATE
	DRAWN BY	
	TRACED BY	
NOTE BOOK	DESIGNED BY	
	QUANTITIES BY	
No.	CHECKED BY	

LICENSED PROFESSIONAL ENGINEER No. 11573-S JERRY S FUJITA HAWAII, U.S.A.

LICENSE EXPIRES 4/30/24

THIS WORK WAS PREPARED BY ME OR UNDER MY SUPERVISION

STATE OF HAWAII
DEPARTMENT OF TRANSPORTATION
HIGHWAYS DIVISION

TYPICAL DETAILS

KAMEHAMEHA HIGHWAY
Laieloa Stream Bridge Replacement
Federal-Aid Project No. BR-083-1(58)

Scale: As Noted Date: September 2023

SHEET No. S0.4 OF 129 SHEETS

PLOT DATE: September 19, 2023 @ 01:46:58 pm
LAST UPDATE: September 19, 2023 @ 10:21:02 am
PATH/FILENAME: C:\Users\jamanaha\AppData\Local\temp\AcPublish_11164\1754_S0-1 - S0-4.dwg
1754 Laieloa Stream Bridge - M&E Pacific\Drawings\Structural\AutoCAD_format\2023-03-15\1754_S0-1 - S0-4.dwg, 9/19/2023 1:46:58 PM, Jamanaha

FED. ROAD DIST. NO.	STATE	FED. AID PROJ. NO.	FISCAL YEAR	SHEET NO.	TOTAL SHEETS
HAWAII	HAW.	BR-083-1(58)	2023	51	129

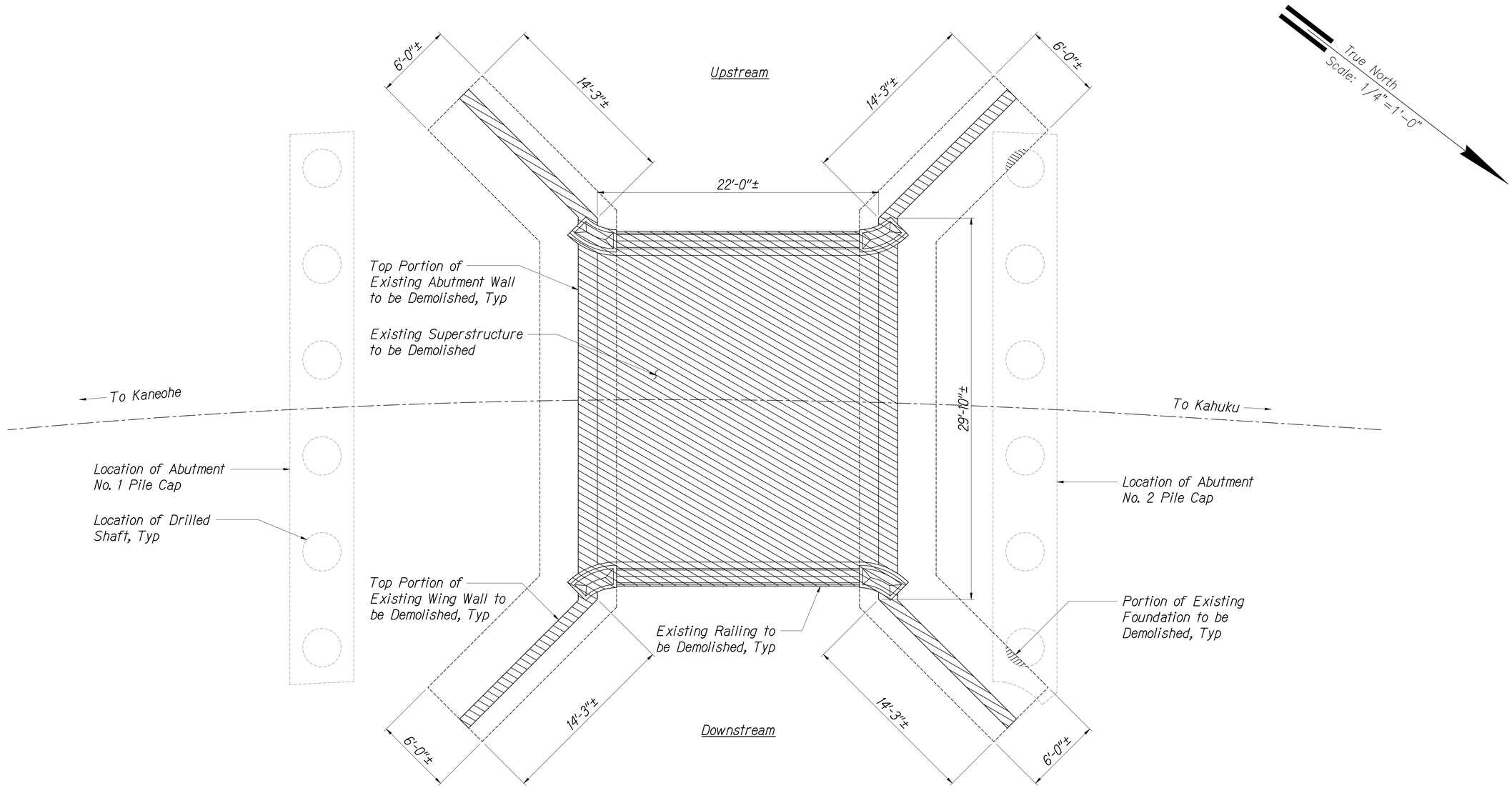

EXISTING BRIDGE DEMOLITION PLAN (1 / S0.5 | S0.5)

Scale: 1/4" = 1'-0"

JERRY S FUJITA
LICENSED PROFESSIONAL ENGINEER
No. 11573-S
HAWAII, U.S.A.

LICENSE EXPIRES 4/30/24

THIS WORK WAS PREPARED BY ME OR UNDER MY SUPERVISION

STATE OF HAWAII
DEPARTMENT OF TRANSPORTATION
HIGHWAYS DIVISION

EXISTING BRIDGE DEMOLITION PLAN

KAMEHAMEHA HIGHWAY
Laieloa Stream Bridge Replacement
Federal-Aid Project No. BR-083-1(58)

Scale: As Noted Date: September 2023

SHEET No. S0.5 OF 129 SHEETS

ORIGINAL PLAN	SURVEY PLOTTED BY	DATE
	DRAWN BY	"
	TRACED BY	"
NOTE BOOK	DESIGNED BY	"
	QUANTITIES BY	"
No.	CHECKED BY	"

PLOT DATE: September 19, 2023 @ 01:47:03 pm

LAST UPDATE: April 12, 2023 @ 06:46:38 pm

PATH/FILENAME: P:\1751-1800\1754 Laieloa Stream Bridge - M&E Pacific\Drawings\Structural\AutoCAD_format\2023-03-15\1754_S0-5 - S0-6.dwg

1754 Laieloa Stream Bridge - M&E Pacific\Drawings\Structural\AutoCAD_format\2023-03-15\1754_S0-5 - S0-6.dwg, 9/19/2023 1:47:03 PM, tamanaha

FED. ROAD DIST. NO.	STATE	FED. AID PROJ. NO.	FISCAL YEAR	SHEET NO.	TOTAL SHEETS
HAWAII	HAW.	BR-083-1(58)	2023	52	129

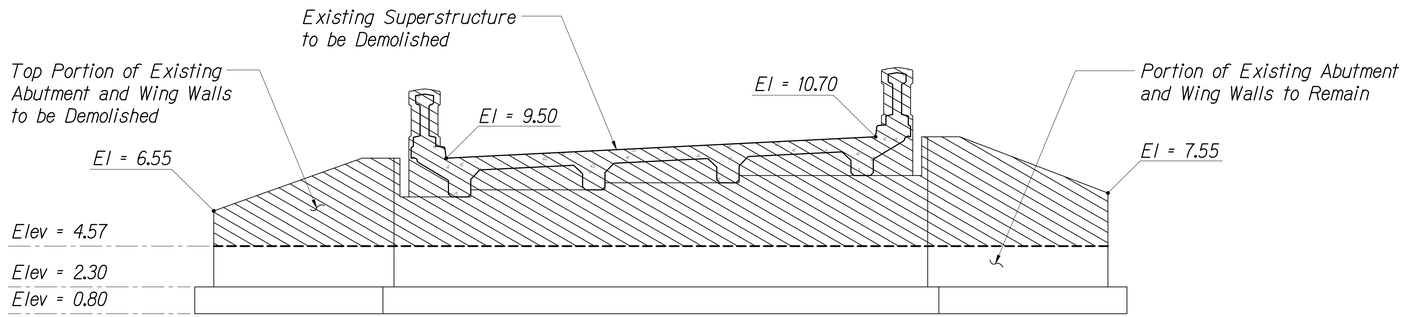

ABUTMENT NO. 1 - DEMO ELEVATION (1 / S0.6 | S0.6)

Scale: 1/4" = 1'-0"

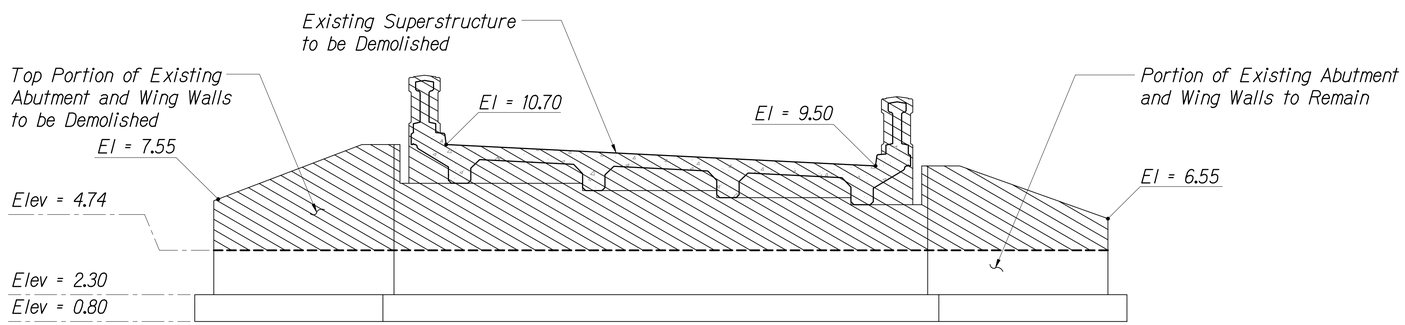

ABUTMENT NO. 2 - DEMO ELEVATION (2 / S0.6 | S0.6)

Scale: 1/4" = 1'-0"

LICENSE EXPIRES 4/30/24

THIS WORK WAS PREPARED BY ME OR UNDER MY SUPERVISION

STATE OF HAWAII
DEPARTMENT OF TRANSPORTATION
HIGHWAYS DIVISION

EXISTING ABUTMENT DEMOLITION ELEVATIONS

KAMEHAMEHA HIGHWAY
Laieloa Stream Bridge Replacement
Federal-Aid Project No. BR-083-1(58)

Scale: As Noted Date: September 2023

SHEET No. S0.6 OF 129 SHEETS

ORIGINAL PLAN	SURVEY PLOTTED BY	DATE
	DRAWN BY	
NOTE BOOK	TRACED BY	
	DESIGNED BY	
	QUANTITIES BY	
No.	CHECKED BY	

PLOT DATE: September 19, 2023 @ 01:47:03 pm

LAST UPDATE: April 12, 2023 @ 06:46:38 pm

PATH/FILENAME: P:\1751-1800\1754 Laieloa Stream Bridge - M&E Pacific\Drawings\Structural\AutoCAD_format\2023-03-15\1754_S0-5 - S0-6.dwg

1754 Laieloa Stream Bridge - M&E Pacific\Drawings\Structural\AutoCAD_format\2023-03-15\1754_S0-5 - S0-6.dwg, 9/19/2023 1:47:03 PM, tamanaha

FED. ROAD DIST. NO.	STATE	FED. AID PROJ. NO.	FISCAL YEAR	SHEET NO.	TOTAL SHEETS
HAWAII	HAW.	BR-083-1(58)	2023	53	129

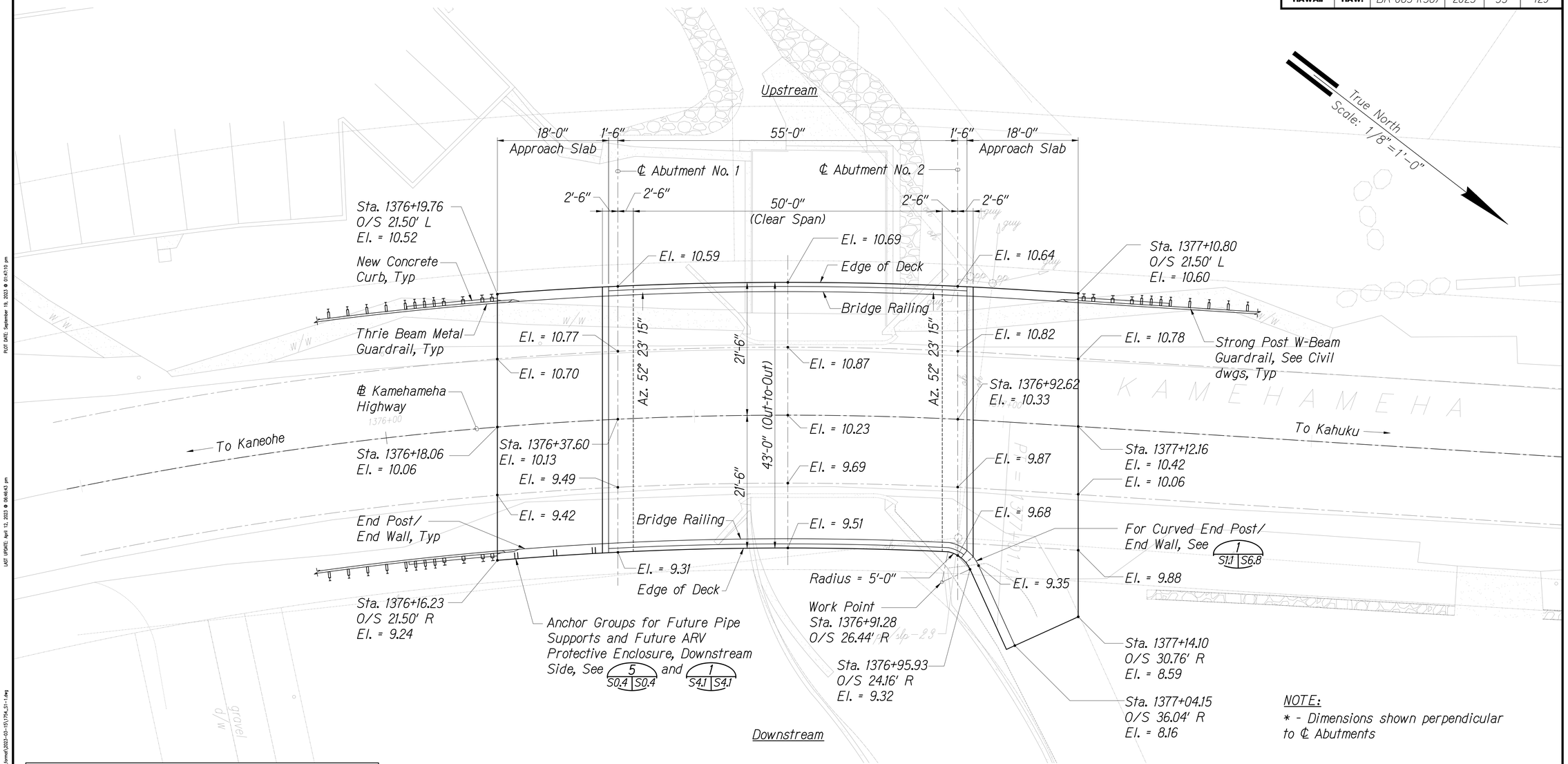

NOTE:
* - Dimensions shown perpendicular to ℄ Abutments

Notes:
1. Contractor shall layout bridge with respect to road baseline stations.
2. Bridge deck width (out to out) is 47'-0" along length of bridge.
3. Edge of bridge decks follow the curve of the road.
4. Bridge railing follows the curve of the road.
5. Contractor shall install Precast Planks and pour Concrete Topping prior to backfilling abutments.
6. See Civil Drawings for Baseline details

BRIDGE LAYOUT PLAN 1 S1.1 S1.1
Scale: 1/8" = 1'-0"

JERRY S FUJITA
LICENSED PROFESSIONAL ENGINEER
No. 11573-S
HAWAII, U.S.A.

LICENSE EXPIRES 4/30/24

THIS WORK WAS PREPARED BY ME OR UNDER MY SUPERVISION

STATE OF HAWAII
DEPARTMENT OF TRANSPORTATION
HIGHWAYS DIVISION

BRIDGE LAYOUT PLAN

KAMEHAMEHA HIGHWAY
Laieloa Stream Bridge Replacement
Federal-Aid Project No. BR-083-1(58)

Scale: As Noted Date: September 2023

SHEET No. S1.1 OF 129 SHEETS

ORIGINAL PLAN	SURVEY PLOTTED BY	DATE
	DRAWN BY	"
	TRACED BY	"
NOTE BOOK	DESIGNED BY	"
	QUANTITIES BY	"
No.	CHECKED BY	"

PLOT DATE: September 19, 2023 @ 01:47:10 pm
LAST UPDATE: April 12, 2023 @ 06:46:43 pm
PWD/FILENAME: P:\1751-1800\1754 Laieloa Stream Bridge - M&E Pacific\Drawings\Structural\AutoCAD_format\2023-03-15\1754_S1-1.dwg
1754 Laieloa Stream Bridge - M&E Pacific\Drawings\Structural\AutoCAD_format\2023-03-15\1754_S1-1.dwg, 9/19/2023 1:47:08 PM, tamanaha

FED. ROAD DIST. NO.	STATE	FED. AID PROJ. NO.	FISCAL YEAR	SHEET NO.	TOTAL SHEETS
HAWAII	HAW.	BR-083-1(58)	2023	54	129

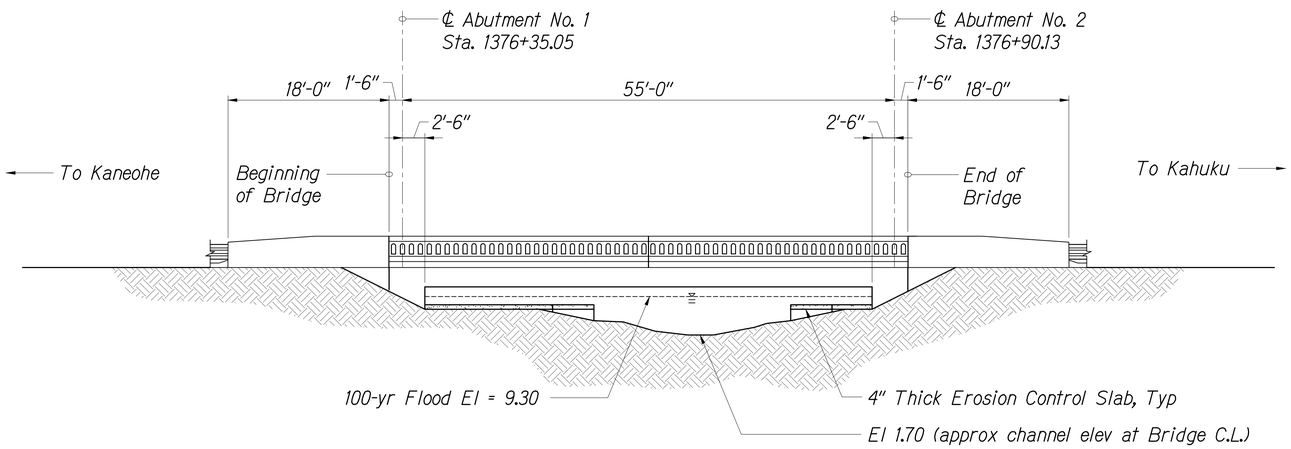

LONGITUDINAL ELEVATION

Scale: 1/8" = 1'-0"

1 / S1.2 | S1.2

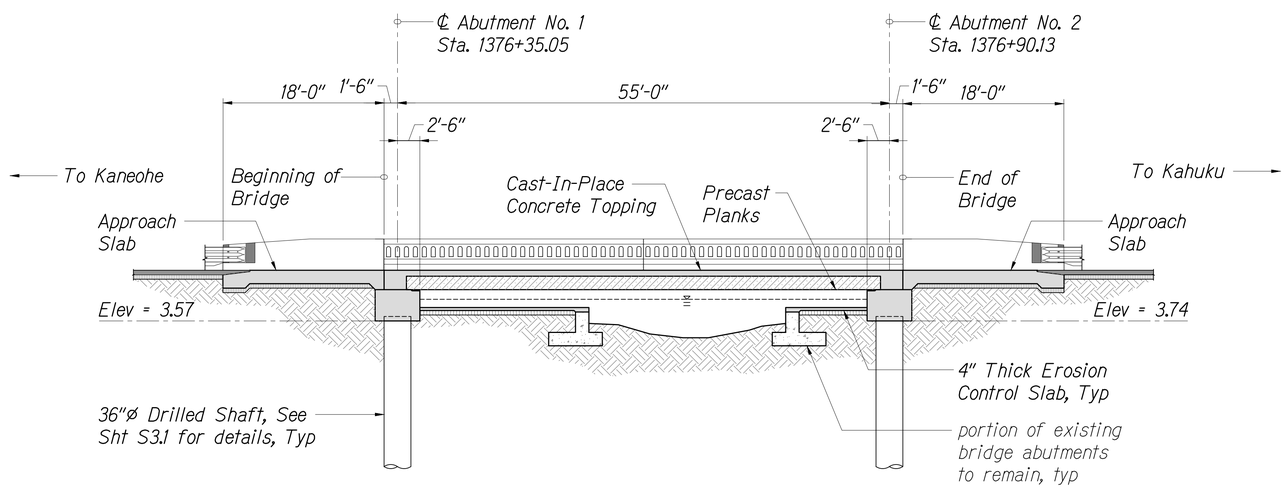

LONGITUDINAL SECTION ALONG ROAD CENTERLINE

Scale: 1/8" = 1'-0"

2 / S1.2 | S1.2

Note:
Sawcut and remove upper portion of existing abutment to provide 2'-0" minimum clearance below bottom of deck. Regrade behind abutment as required. Typical for both abutments.

JERRY S FUJITA
LICENSED PROFESSIONAL ENGINEER
No. 11573-S
HAWAII, U.S.A.

LICENSE EXPIRES 4/30/24

THIS WORK WAS PREPARED BY ME OR UNDER MY SUPERVISION

STATE OF HAWAII
DEPARTMENT OF TRANSPORTATION
HIGHWAYS DIVISION

LONGITUDINAL ELEVATION AND SECTION

KAMEHAMEHA HIGHWAY
Laieloa Stream Bridge Replacement
Federal-Aid Project No. BR-083-1(58)

Scale: As Noted Date: September 2023

SHEET No. S1.2 OF 129 SHEETS

ORIGINAL PLAN	SURVEY PLOTTED BY	DATE
	DRAWN BY	
	TRACED BY	
NOTE BOOK	DESIGNED BY	
	QUANTITIES BY	
No.	CHECKED BY	

PLOT DATE: September 19, 2023 @ 01:47:13 pm

LAST UPDATE: April 12, 2023 @ 06:46:48 pm

PATH/FILENAME: P:\1751-1800\1754 Laieloa Stream Bridge - M&E Pacific\Drawings\Structural\AutoCAD_format\2023-03-15\1754_S1-2.dwg

1754 Laieloa Stream Bridge - M&E Pacific\Drawings\Structural\AutoCAD_format\2023-03-15\1754_S1-2.dwg, 9/19/2023 1:47:14 PM, tamanaha

FED. ROAD DIST. NO.	STATE	FED. AID PROJ. NO.	FISCAL YEAR	SHEET NO.	TOTAL SHEETS
HAWAII	HAW.	BR-083-1(58)	2023	55	129

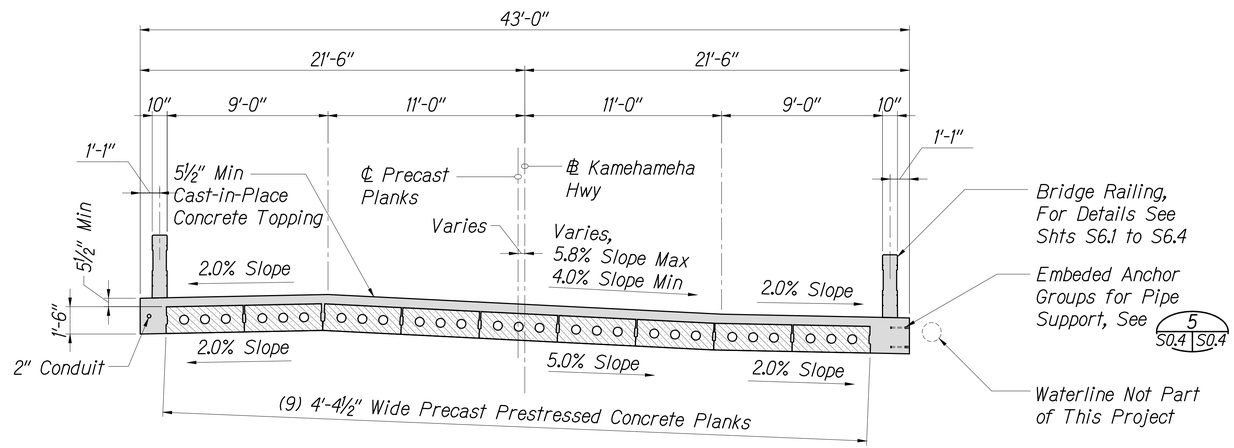

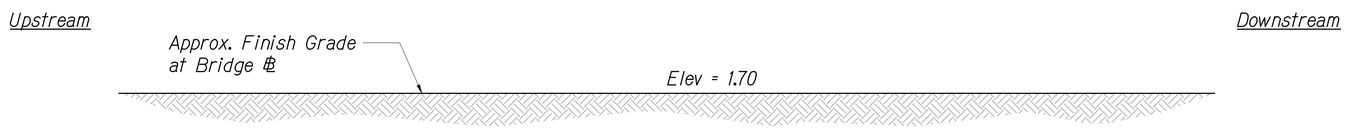

Notes:
1. See Civil Drawings for superelevation details.

TYPICAL CROSS SECTION 1 S1.3 S1.3
Scale : 1/4" = 1'-0"

LICENSE EXPIRES 4/30/24

THIS WORK WAS PREPARED BY ME OR UNDER MY SUPERVISION

STATE OF HAWAII
DEPARTMENT OF TRANSPORTATION
HIGHWAYS DIVISION

TYPICAL CROSS SECTION

KAMEHAMEHA HIGHWAY
Laieloa Stream Bridge Replacement
Federal-Aid Project No. BR-083-1(58)

Scale: As Noted Date: September 2023

SHEET No. S1.3 OF 129 SHEETS

ORIGINAL PLAN | SURVEY PLOTTED BY | DRAWN BY | TRACED BY | DESIGNED BY | QUANTITIES BY | CHECKED BY | DATE | NOTE BOOK No.

PATH/FILENAME: P:\1751-1800\1754 Laieloa Stream Bridge - M&E Pacific\Drawings\Structural\AutoCAD_format\2023-03-15\1754_S1-3.dwg

LAST UPDATE: July 28, 2023 @ 11:53:56 am

PLOT DATE: September 19, 2023 @ 01:47:18 pm

1754 Laieloa Stream Bridge - M&E Pacific\Drawings\Structural\AutoCAD_format\2023-03-15\1754_S1-3.dwg, 9/19/2023 1:47:18 PM, tamanaha

FED. ROAD DIST. NO.	STATE	FED. AID PROJ. NO.	FISCAL YEAR	SHEET NO.	TOTAL SHEETS
HAWAII	HAW.	BR-083-1(58)	2023	56	129

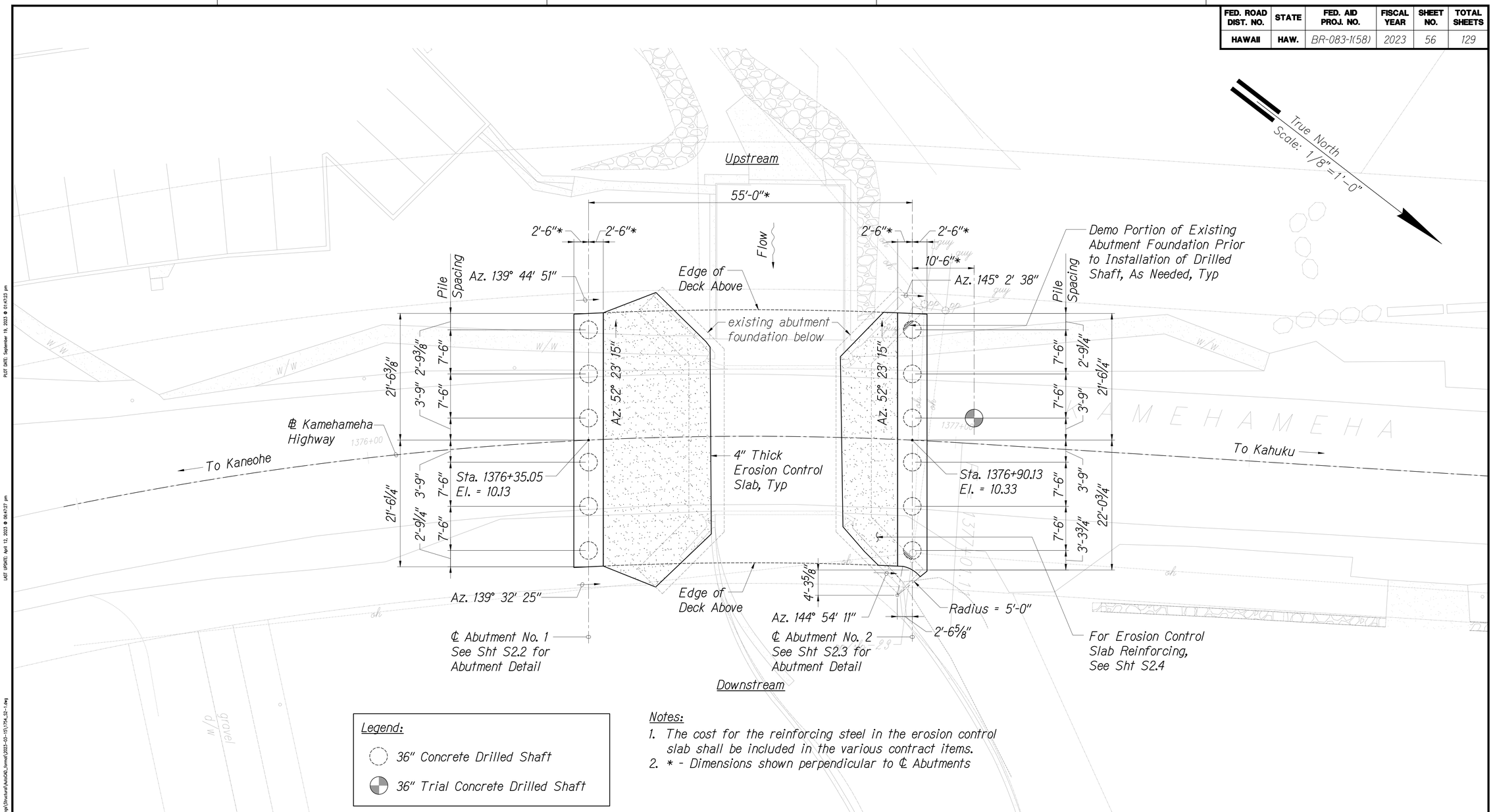

Legend:

- 36" Concrete Drilled Shaft
- 36" Trial Concrete Drilled Shaft

Notes:

1. The cost for the reinforcing steel in the erosion control slab shall be included in the various contract items.
2. * - Dimensions shown perpendicular to ℄ Abutments

FOUNDATION LAYOUT PLAN

Scale : 1/8" = 1'-0"

1
S2.1 | S2.1

JERRY S FUJITA
LICENSED PROFESSIONAL ENGINEER
No. 11573-S
HAWAII, U.S.A.

LICENSE EXPIRES 4/30/24

THIS WORK WAS PREPARED BY ME OR UNDER MY SUPERVISION

STATE OF HAWAII
DEPARTMENT OF TRANSPORTATION
HIGHWAYS DIVISION

FOUNDATION LAYOUT PLAN

KAMEHAMEHA HIGHWAY
Laieloa Stream Bridge Replacement
Federal-Aid Project No. BR-083-1(58)

Scale: As Noted Date: September 2023

SHEET No. S2.1 OF 129 SHEETS

ORIGINAL PLAN — SURVEY PLOTTED BY ____ DATE ____
DRAWN BY ____
TRACED BY ____
NOTE BOOK DESIGNED BY ____
QUANTITIES BY ____
No. ____ CHECKED BY ____

PWN/FILENAME: P:\751--1800\1754 Laieloa Stream Bridge - M&E Pacific\Drawings\Structural\AutoCAD_format\2023-03-15\1754_S2-1.dwg

LAST UPDATE: April 12, 2023 @ 06:47:27 pm

PLOT DATE: September 19, 2023 @ 01:47:23 pm

1754 Laieloa Stream Bridge - M&E Pacific\Drawings\Structural\AutoCAD_format\2023-03-15\1754_S2-1.dwg, 9/19/2023 1:47:23 PM, tamanaha

FED. ROAD DIST. NO.	STATE	FED. AID PROJ. NO.	FISCAL YEAR	SHEET NO.	TOTAL SHEETS
HAWAII	HAW.	BR-083-1(58)	2023	57	129

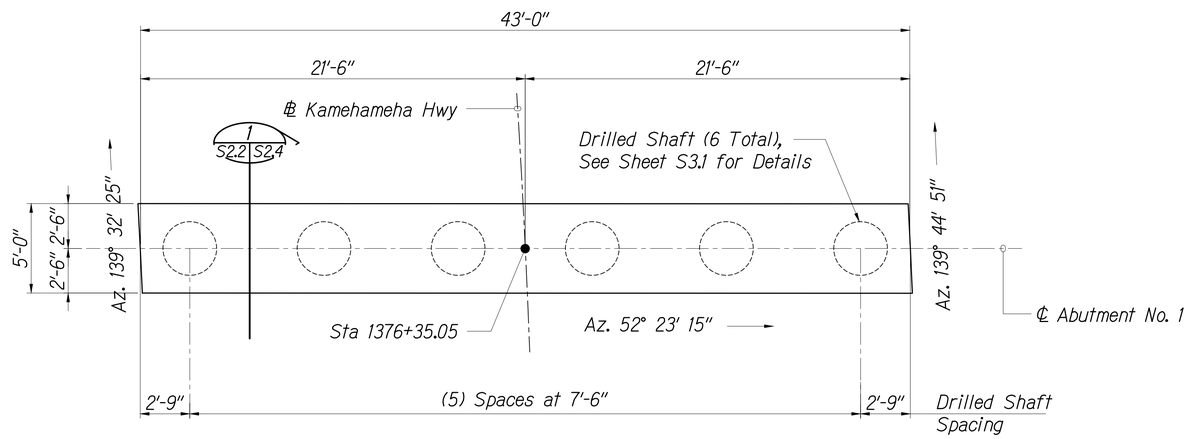

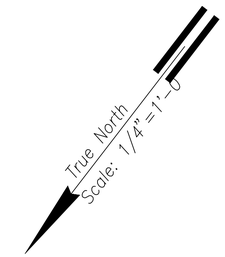

ABUTMENT NO. 1 - FOUNDATION PLAN (1 / S2.2 | S2.2)

Scale: 1/4" = 1'-0"

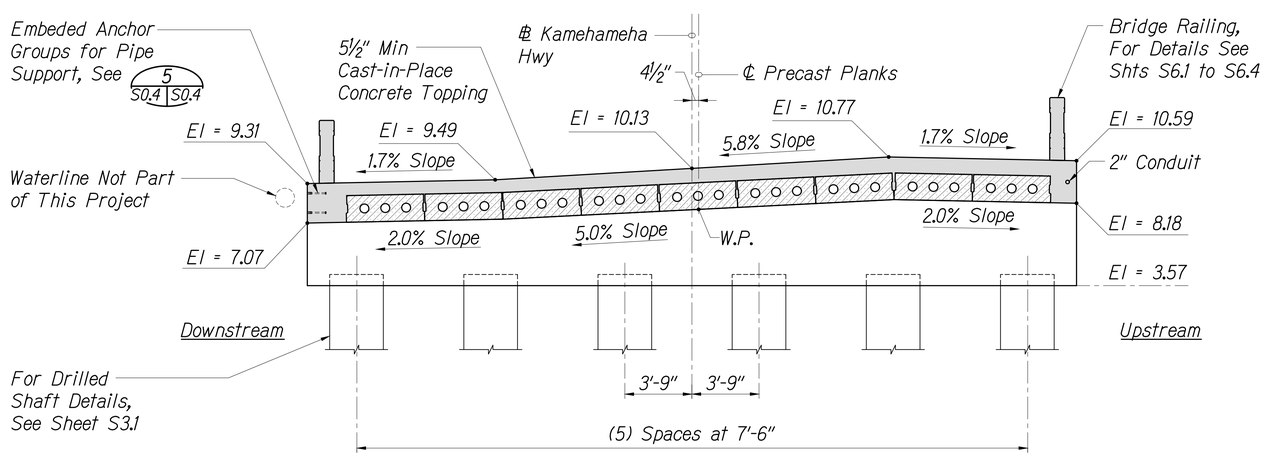

ABUTMENT NO. 1 - ELEVATION (2 / S2.2 | S2.2)

Scale: 1/4" = 1'-0"

Note:
1. Bridge deck cross slope varies. See Civil Drawings for superelevation details.

JERRY S FUJITA
LICENSED PROFESSIONAL ENGINEER
No. 11573-S
HAWAII, U.S.A.

LICENSE EXPIRES 4/30/24

THIS WORK WAS PREPARED BY ME OR UNDER MY SUPERVISION

STATE OF HAWAII
DEPARTMENT OF TRANSPORTATION
HIGHWAYS DIVISION

ABUTMENT NO. 1 FOUNDATION PLAN AND ELEVATION

KAMEHAMEHA HIGHWAY
Laieloa Stream Bridge Replacement
Federal-Aid Project No. BR-083-1(58)

Scale: As Noted Date: September 2023

SHEET No. S2.2 OF 129 SHEETS

ORIGINAL PLAN	SURVEY PLOTTED BY	DATE
	DRAWN BY	
	TRACED BY	
NOTE BOOK	DESIGNED BY	
	QUANTITIES BY	
No.	CHECKED BY	

PLOT DATE: September 19, 2023 @ 01:47:30 pm

LAST UPDATE: July 28, 2023 @ 11:53:54 am

PATH/FILENAME: P:\1751-1800\1754 Laieloa Stream Bridge - M&E Pacific\Drawings\Structural\AutoCAD_format\2023-03-15\1754_S2-2 - S2-3.dwg

1754 Laieloa Stream Bridge - M&E Pacific\Drawings\Structural\AutoCAD_format\2023-03-15\1754_S2-2 - S2-3.dwg, 9/19/2023 1:47:29 PM, tamanaha

FED. ROAD DIST. NO.	STATE	FED. AID PROJ. NO.	FISCAL YEAR	SHEET NO.	TOTAL SHEETS
HAWAII	HAW.	BR-083-1(58)	2023	58	129

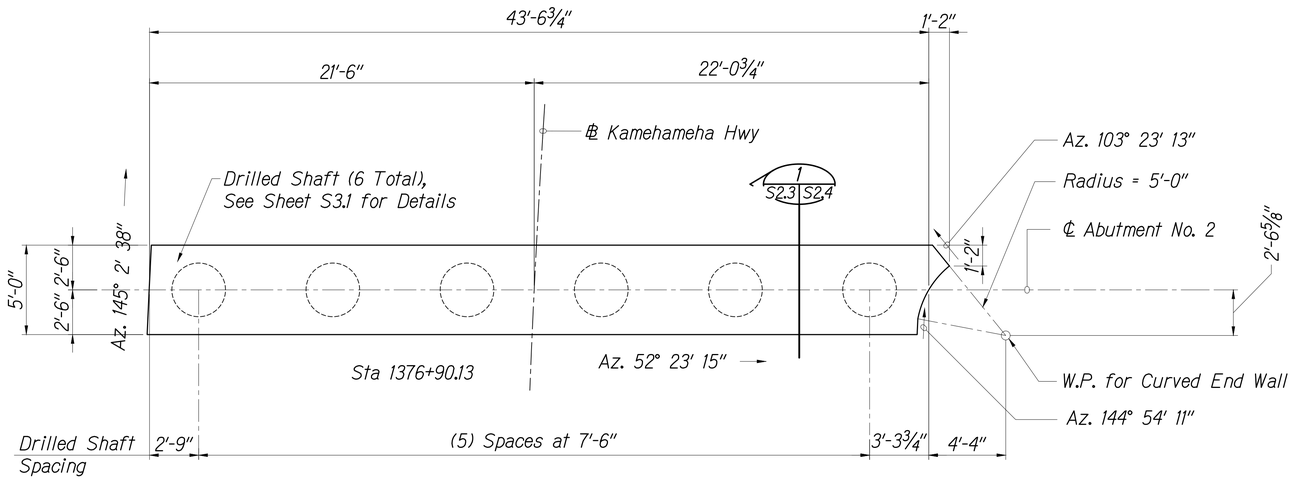

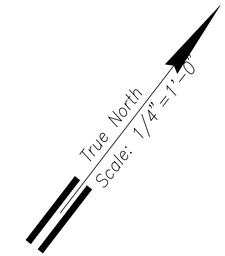

ABUTMENT NO. 2 - FOUNDATION PLAN (1 / S2.3 | S2.3)

Scale: 1/4" = 1'-0"

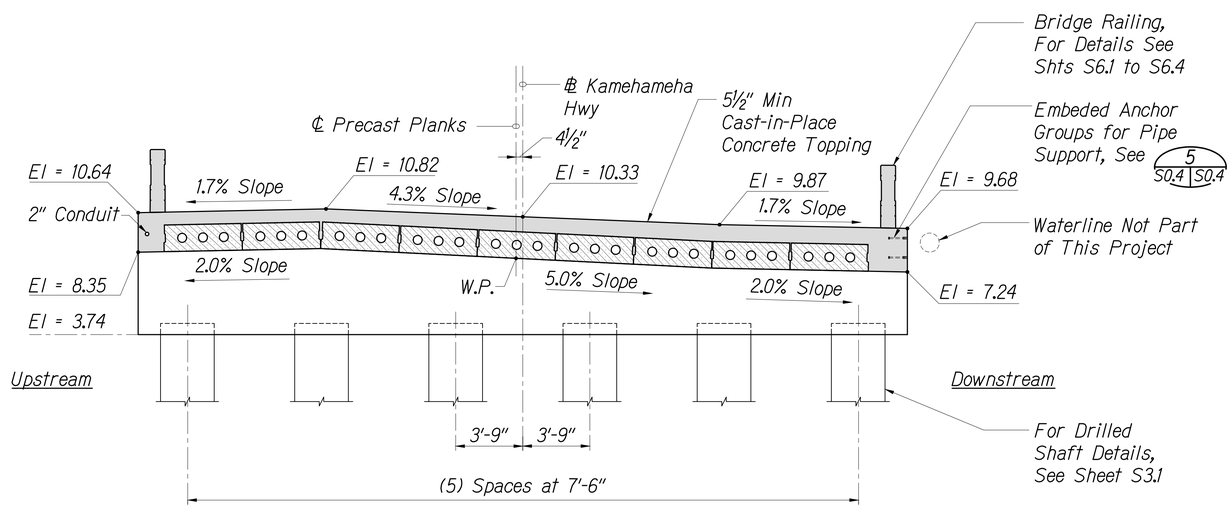

Note:
1. Bridge deck cross slope varies. See Civil Drawings for superelevation details.

ABUTMENT NO. 2 - ELEVATION (2 / S2.3 | S2.3)

Scale: 1/4" = 1'-0"

JERRY S FUJITA
LICENSED PROFESSIONAL ENGINEER
No. 11573-S
HAWAII, U.S.A.

LICENSE EXPIRES 4/30/24

THIS WORK WAS PREPARED BY ME OR UNDER MY SUPERVISION

STATE OF HAWAII
DEPARTMENT OF TRANSPORTATION
HIGHWAYS DIVISION

ABUTMENT NO. 2 FOUNDATION PLAN AND ELEVATION

KAMEHAMEHA HIGHWAY
Laieloa Stream Bridge Replacement
Federal-Aid Project No. BR-083-1(58)

Scale: As Noted Date: September 2023

SHEET No. S2.3 OF 129 SHEETS

ORIGINAL PLAN	SURVEY PLOTTED BY	DATE
	DRAWN BY	
	TRACED BY	
NOTE BOOK	DESIGNED BY	
	QUANTITIES BY	
No.	CHECKED BY	

PLOT DATE: September 19, 2023 @ 01:47:30 pm
LAST UPDATE: July 28, 2023 @ 11:53:54 am
PWN/FILENAME: P:\1751-1800\1754 Laieloa Stream Bridge - M&E Pacific\Drawings\Structural\AutoCAD_format\2023-03-15\1754_S2-2 - S2-3.dwg
1754 Laieloa Stream Bridge - M&E Pacific\Drawings\Structural\AutoCAD_format\2023-03-15\1754_S2-2 - S2-3.dwg, 9/19/2023 1:47:30 PM, tamanaha

FED. ROAD DIST. NO.	STATE	FED. AID PROJ. NO.	FISCAL YEAR	SHEET NO.	TOTAL SHEETS
HAWAII	HAW.	BR-083-1(58)	2023	59	129

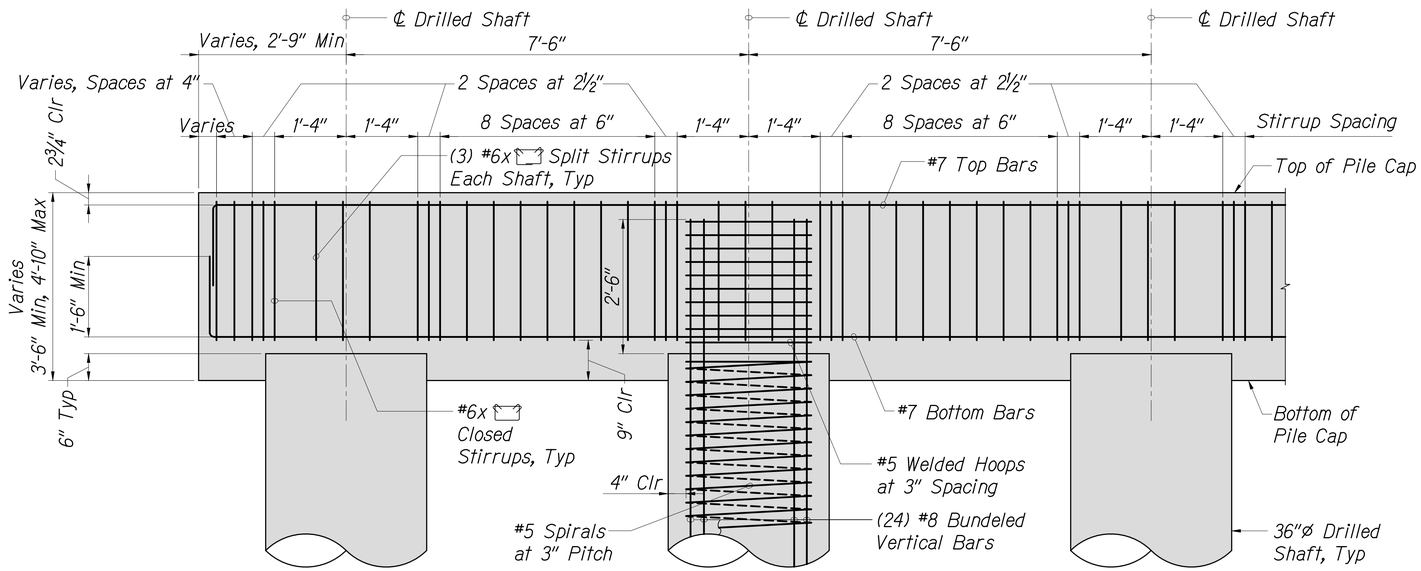

TYPICAL PILE CAP ELEVATION (2 / S2.4 | S2.4)

Scale: 3/4" = 1'-0"

Note:
Horizontal reinforcing not shown for clarity.

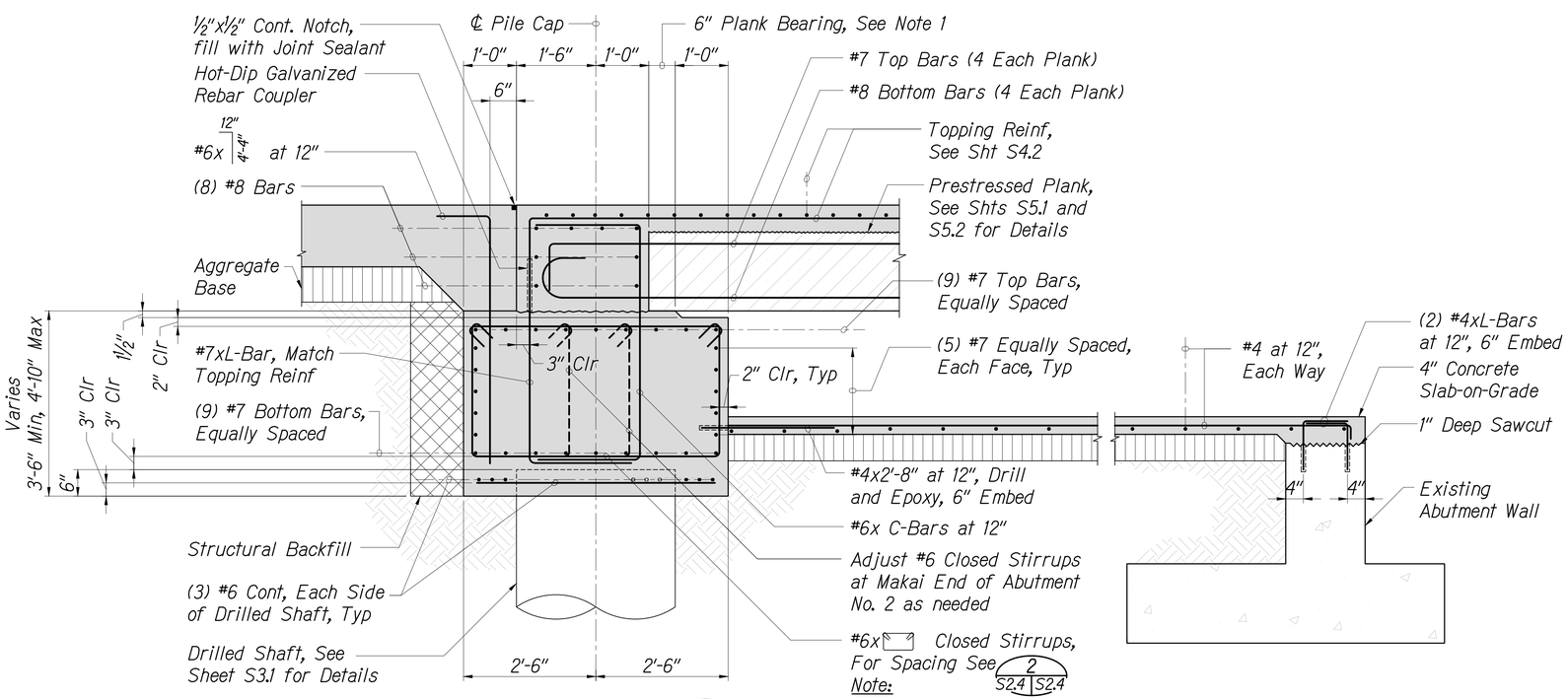

TYPICAL PILE CAP SECTION (1 / S2.2, S2.3, S4.1 | S2.4)

Scale: 3/4" = 1'-0"

Note:
All hooks shall be standard 135° bends.

Legend

- Excavation Pay Limits
- Structure Backfill

Notes:

1. The precast planks shall bear on a flat and smooth surface. Apply leveling grout immediately prior to placing planks.
2. At Abutment No. 2, lower face, horizontal reinforcing shall be bent 45 degrees as needed around chamfers.

JERRY S FUJITA
LICENSED PROFESSIONAL ENGINEER
No. 11573-S
HAWAII, U.S.A.

LICENSE EXPIRES 4/30/24

THIS WORK WAS PREPARED BY ME OR UNDER MY SUPERVISION

STATE OF HAWAII
DEPARTMENT OF TRANSPORTATION
HIGHWAYS DIVISION

TYPICAL PILE CAP SECTION AND ELEVATION

KAMEHAMEHA HIGHWAY
Laieloa Stream Bridge Replacement
Federal-Aid Project No. BR-083-1(58)

Scale: As Noted Date: September 2023

SHEET No. S2.4 OF 129 SHEETS

ORIGINAL PLAN	SURVEY PLOTTED BY	DATE
	DRAWN BY	
	TRACED BY	
NOTE BOOK	DESIGNED BY	
	QUANTITIES BY	
No.	CHECKED BY	

PLOT DATE: September 19, 2023 @ 01:47:34 pm

LAST UPDATE: May 22, 2023 @ 04:06:42 pm

PATH/FILENAME: P:\1751-1800\1754 Laieloa Stream Bridge - M&E Pacific\Drawings\Structural\AutoCAD_format\2023-03-15\1754_S2-4.dwg

1754 Laieloa Stream Bridge - M&E Pacific\Drawings\Structural\AutoCAD_format\2023-03-15\1754_S2-4.dwg, 9/19/2023 1:47:34 PM, tamanaha

FED. ROAD DIST. NO.	STATE	FED. AID PROJ. NO.	FISCAL YEAR	SHEET NO.	TOTAL SHEETS
HAWAII	HAW.	BR-083-1(58)	2023	60	129

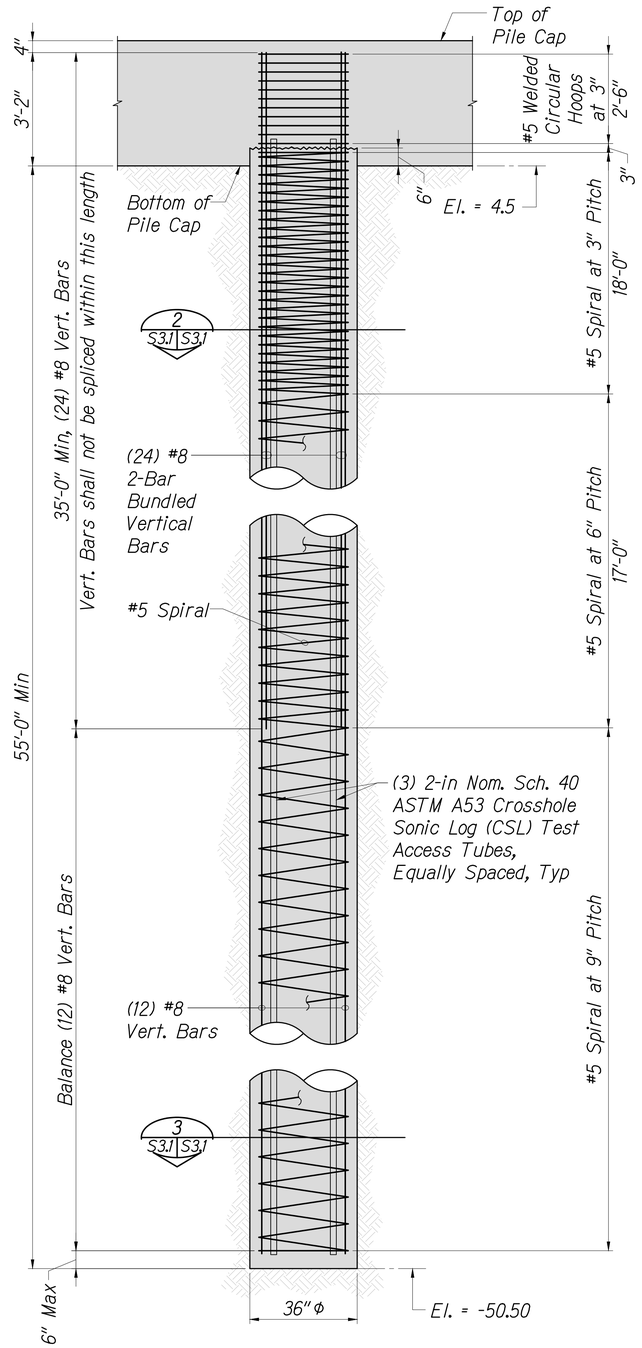

TYPICAL DRILLED SHAFT DETAIL 1 S3.1 S3.1
Scale: 1/2" = 1'-0"

Notes:

1. Concrete for drilled shafts shall have a minimum 28-day compressive strength of 4,500 psi.
2. Reinforcing steel shall be deformed bars conforming to ASTM A615, Grade 60 or ASTM A706, Grade 60.
3. Anchorage of spiral reinforcing shall be provided by 1½ extra turns of spiral bar at each end of spiral unit.
4. Spiral reinforcing lap splice shall be 3'-6" minimum.
5. Welded Hoops shall use complete joint penetration single or double V-groove welds in accordance with AWS D1.4.
6. For vertical bar splices and spiral splices, mechanical connectors are allowed in lieu of lapping bars. All mechanical connectors shall be submitted to the engineer for review.
7. Drilled shafts shall be constructed with the use of temporary casings to prevent caving. The temporary casing shall extend at least 30 feet of the shaft excavations. The inside diameter of temporary casing shall not be less than the specified shaft diameter. The design of the casing, including the material type, strength, and wall thickness shall be the responsibility of the contractor.
8. A minimum 5 foot head of concrete above the bottom of the casing or more to adequately counter hydrostatic pressure shall be maintained during removal of the casing to reduce the potential for "necking" of the drilled shaft.
9. In anticipation of existence of shallow ground water during drilled shaft excavations, concrete placement by tremie methods will be required during construction of the drilled shafts. Ground water shall be controlled to prevent flowing water over excavations.
10. The Contractor shall exercise care in drilling the shaft holes and placing concrete into the holes. A low-shrink concrete mix with high slump (7 to 9-inch range) shall be used to provide close contact between the drilled shafts and the surrounding soils. Concrete shall be placed in a suitable manner to reduce the potential for segregation of the aggregates from the concrete mix.
11. A Civil Engineer, licensed in the State of Hawaii and who specializes in Geotechnical Engineering, shall observe the production of all drilled shafts. The Contractor shall be responsible for paying for Geotechnical services.
12. Drilled shaft bottom elevations shall be verified by the Geotechnical Engineer prior to installing reinforcing bar cage and placement of concrete.
13. Drilled shafts are designed to be embedded into dense to hard coral formation encountered at depths. Therefore, coring into the dense to hard coral formation will be required.
14. Crosshole Sonic Logging (CSL) shall be conducted in accordance with HDOT specifications. Shafts indicating irregular CSL reading may be subject to additional testing.
15. A test shaft program consisting of drilling a 36 inch diameter test shaft extending to an elevation of about -65.0 feet below MSL is required. A bi-directional axial load test utilizing the Osterberg Load Cell shall be conducted on the test shaft. The test shall be preformed in general accordance with the quick load test method of ASTM D1143. The maximum test load shall be 648 kips. See sheet S2.1 for location of test shaft. The test shaft program shall be observed by the Geotechnical Engineer.

LATERAL LOAD AND MAXIMUM INDUCED MOMENT IN THE DRILLED SHAFT FOUNDATIONS

Location	Loading Condition	Lateral load (kips)	Maximum Moment Induced (kips-feet)
Abutment No. 1	Strength Limit State	38	800
	Extreme Event Limit State	104	460
Abutment No. 2	Strength Limit State	38	795
	Extreme Event Limit State	102	520

COMPRESSION LOAD CAPACITIES FOR DRILLED SHAFTS

Shaft Diameter (feet)	Compressive Load Capacity Per Drilled Shaft (kips)	
	Extreme Event Limit State	Strength Limit State
3	525	260

UPLIFT LOAD CAPACITIES FOR DRILLED SHAFTS

Shaft Diameter (feet)	Uplift Load Capacity Per Drilled Shaft (kips)	
	Extreme Event Limit State	Strength Limit State
3	360	125

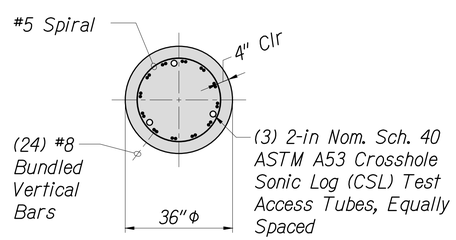

SECTION 2 S3.1 S3.1
Scale: 1/2" = 1'-0"

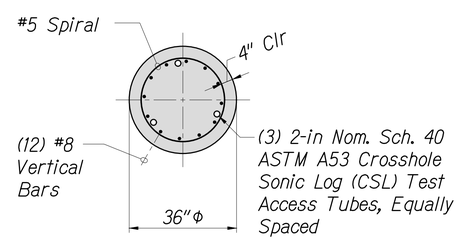

SECTION 3 S3.1 S3.1
Scale: 1/2" = 1'-0"

JERRY S. FUJITA LICENSED PROFESSIONAL ENGINEER No. 11573-S HAWAII, U.S.A.
LICENSE EXPIRES 4/30/24
THIS WORK WAS PREPARED BY ME OR UNDER MY SUPERVISION

STATE OF HAWAII
DEPARTMENT OF TRANSPORTATION
HIGHWAYS DIVISION

TYPICAL DRILLED SHAFT DETAILS

KAMEHAMEHA HIGHWAY
Laieloa Stream Bridge Replacement
Federal-Aid Project No. BR-083-1(58)

Scale: As Noted Date: September 2023

SHEET No. S3.1 OF 129 SHEETS

ORIGINAL PLAN | SURVEY PLOTTED BY | DRAWN BY | TRACED BY | DESIGNED BY | QUANTITIES BY | CHECKED BY | DATE
NOTE BOOK No.

PWN/FILENAME: P:\1751-1800\1754 Laieloa Stream Bridge - M&E Pacific\Drawings\Structural\AutoCAD_format\2023-03-15\1754_S3-1.dwg
PLOT DATE: September 19, 2023 @ 01:41:39 pm
LAST UPDATE: May 22, 2023 @ 04:05:27 pm
1754 Laieloa Stream Bridge - M&E Pacific\Drawings\Structural\AutoCAD_format\2023-03-15\1754_S3-1.dwg, 9/19/2023 1:47:39 PM, tamanaha

FED. ROAD DIST. NO.	STATE	FED. AID PROJ. NO.	FISCAL YEAR	SHEET NO.	TOTAL SHEETS
HAWAII	HAW.	BR-083-1(58)	2023	61	129

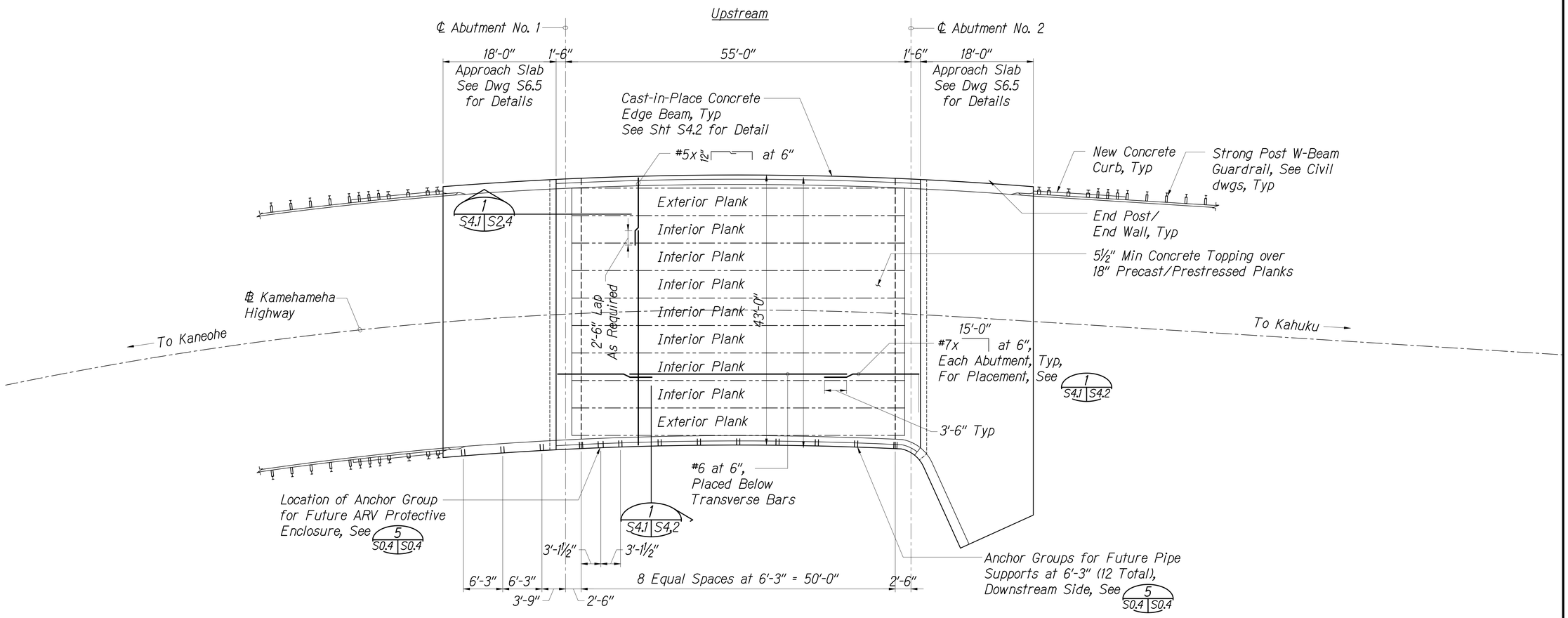

Legend

Interior Plank/ Exterior Plank — Denotes Precast/Prestressed Plank Type, See dwgs S5.1 and S5.2 for Details.

DECK FRAMING PLAN (1 / S4.1 S4.1)

Scale: 1/8" = 1'-0"

LICENSE EXPIRES 4/30/24

THIS WORK WAS PREPARED BY ME OR UNDER MY SUPERVISION

STATE OF HAWAII
DEPARTMENT OF TRANSPORTATION
HIGHWAYS DIVISION

DECK FRAMING PLAN

KAMEHAMEHA HIGHWAY
Laieloa Stream Bridge Replacement
Federal-Aid Project No. BR-083-1(58)

Scale: As Noted — Date: September 2023

SHEET No. S4.1 OF 129 SHEETS

ORIGINAL PLAN — SURVEY PLOTTED BY / DRAWN BY / TRACED BY / DESIGNED BY / QUANTITIES BY / CHECKED BY — DATE
NOTE BOOK No.

PLOT DATE: September 19, 2023 @ 01:47:42 pm
LAST UPDATE: April 12, 2023 @ 08:47:49 pm
PATH/FILENAME: P:\1751-1800\1754 Laieloa Stream Bridge - M&E Pacific\Drawings\Structural\AutoCAD_format\2023-03-15\1754_S4-1.dwg
1754 Laieloa Stream Bridge - M&E Pacific\Drawings\Structural\AutoCAD_format\2023-03-15\1754_S4-1.dwg, 9/19/2023 1:47:43 PM, tamanaha

FED. ROAD DIST. NO.	STATE	FED. AID PROJ. NO.	FISCAL YEAR	SHEET NO.	TOTAL SHEETS
HAWAII	HAW.	BR-083-1(58)	2023	62	129

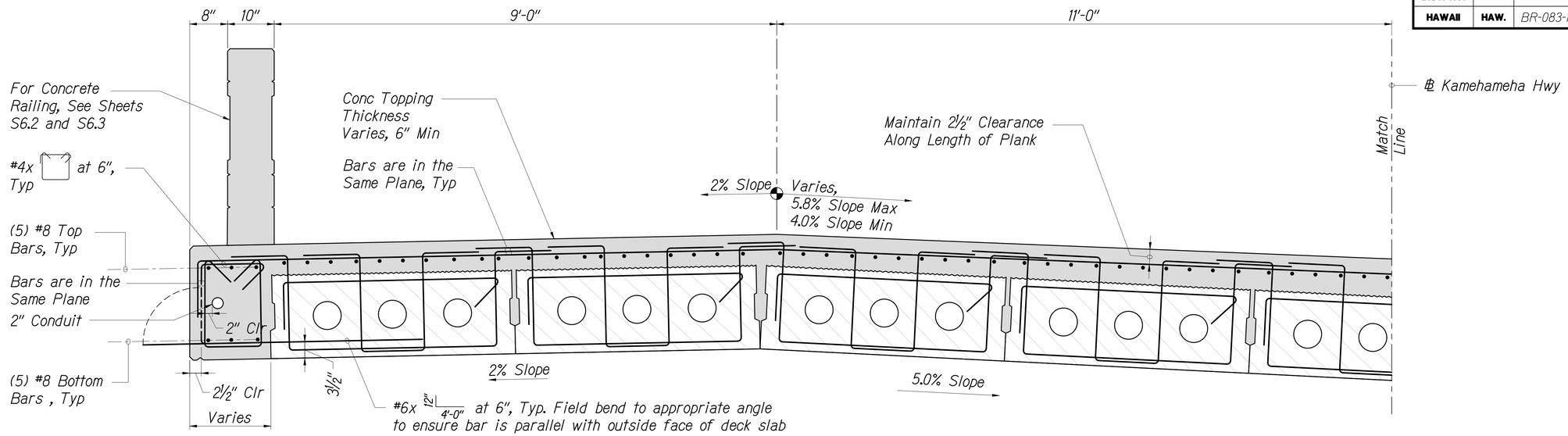

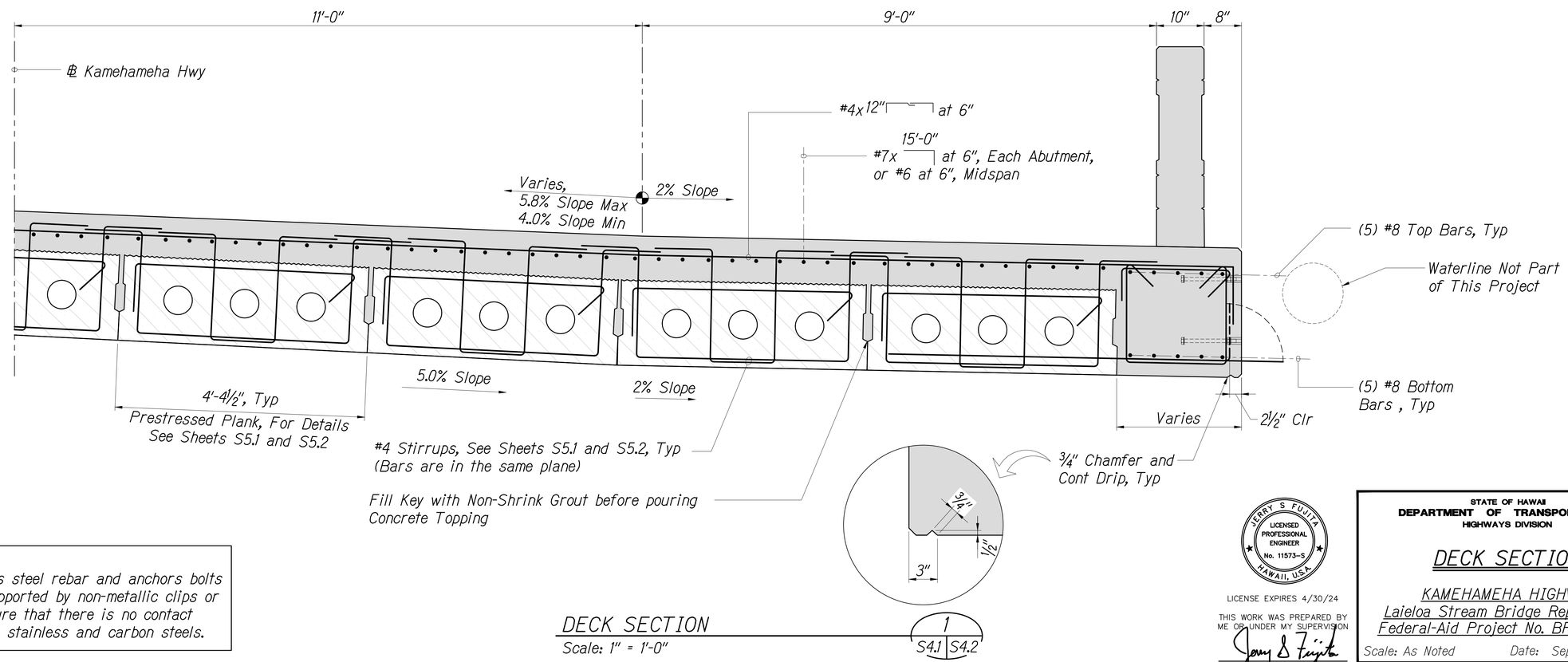

Note:
All stainless steel rebar and anchors bolts shall be supported by non-metallic clips or ties to ensure that there is no contact between the stainless and carbon steels.

DECK SECTION
Scale: 1" = 1'-0"

1
S4.1 S4.2

JERRY S FUJITA
LICENSED PROFESSIONAL ENGINEER
No. 11573-S
HAWAII, U.S.A.

LICENSE EXPIRES 4/30/24

THIS WORK WAS PREPARED BY ME OR UNDER MY SUPERVISION

STATE OF HAWAII
DEPARTMENT OF TRANSPORTATION
HIGHWAYS DIVISION

DECK SECTION

KAMEHAMEHA HIGHWAY
Laieloa Stream Bridge Replacement
Federal-Aid Project No. BR-083-1(58)

Scale: As Noted Date: September 2023

SHEET No. S4.2 OF 129 SHEETS

ORIGINAL PLAN	SURVEY PLOTTED BY	DATE
	DRAWN BY	"
	TRACED BY	"
NOTE BOOK	DESIGNED BY	"
	QUANTITIES BY	"
No.	CHECKED BY	"

PLOT DATE: September 19, 2023 @ 01:47:47 pm
LAST UPDATE: July 28, 2023 @ 11:53:46 am
PWN/FILENAME: P:\1751-1800\1754 Laieloa Stream Bridge - M&E Pacific\Drawings\Structural\AutoCAD_format\2023-03-15\1754_S4-2.dwg, 9/19/2023 1:47:47 PM, tamanaha
1754 Laieloa Stream Bridge - M&E Pacific\Drawings\Structural\AutoCAD_format\2023-03-15\1754_S4-2.dwg

FED. ROAD DIST. NO.	STATE	FED. AID PROJ. NO.	FISCAL YEAR	SHEET NO.	TOTAL SHEETS
HAWAII	HAW.	BR-083-1(58)	2023	63	129

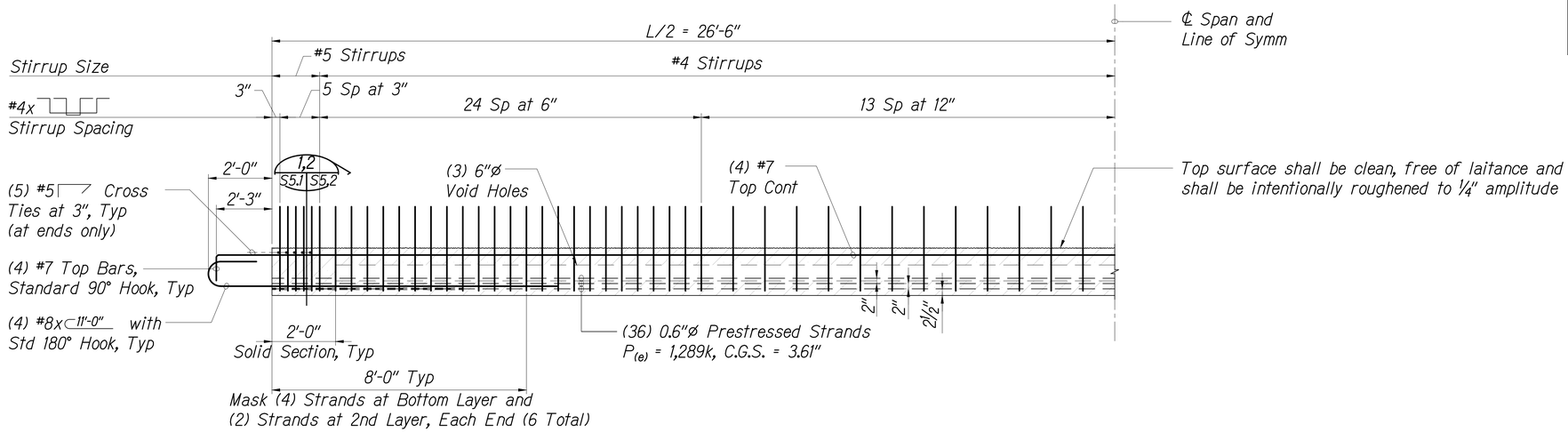

TYPICAL PRESTRESSED PLANK (INTERIOR/EXTERIOR) ELEVATION

1
S5.1 S5.1

Scale: 1/2" = 1'-0"

PRESTRESSED PLANK NOTES:

1. Concrete 28 day compressive strength, f'c = 8,000 psi. Concrete compressive strength at time of prestressing release, fci = 6,500 psi.
2. All strands shall be 0.6" diameter, 7-wire low relaxation strands conforming to AASHTO M203 (ASTM A416), Grade 270.
3. Initial tensioning stress (before any losses) shall be 202.50 ksi.
4. Non-prestessed (mild) reinforcing steel shall be deformed bars conforming to ASTM A615 Grade 60.
5. Strand pattern shall be symmetrical about the longitudinal center line of the plank.
6. Strand release sequence shall not to induce any lateral deflection of the plank.
7. Contractor shall submit shop drawings indicating proposed strand pattern, releasing sequence, reinforcing details and hold down device details to the Engineer prior to fabrication.
8. Contractor shall submit structural calculations for prestressed concrete beams stamped by a structural engineer licensed in the State of Hawaii to the Engineer for approval prior to fabrication.
9. During curing, care shall be taken to avoid any lateral deflection to the plank due to improper orientation.
10. Excessive damage or honeycombing may be grounds for rejection.
11. Lifting devices shall be placed as close as possible to the centerline of bearings of the plank. Details and locations of lifting devices shall be submitted to the Engineer for record. Such a submittal does not relieve the Contractor of their responsibilities if the beam is damaged due to failure of the lifting device.
12. P(e) = effective prestressing force after all losses (kips)
13. Stirrups shall be placed parallel to the plank skew.
14. See Prestressed Plank Plan for plank length.

Calculated Camber △c	Immediately After Release of Prestress	2.33"
	At Erection	3.94"
Dead Load Deflection △d		0.75"

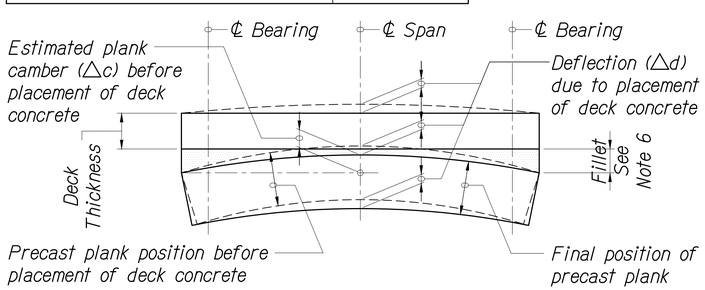

PRESTRESSED PLANK CAMBER DIAGRAM

CAMBER DIAGRAM NOTES:

1. The calculated camber, △c, includes the effects of the initial prestress force, the weight of the precast plank after removal from the bed, and time-dependant properties of concrete (compressive strength, modulus of elasticity, creep strain, and shrinkage strain) were included in the analysis. The time-dependant modulus of elasticity of concrete was multiplied by 0.85 to account for the effect of the type of aggregate.
2. The type of aggregate to be used in all of the planks shall be obtained from a single supplier and quarry site.
3. The contractor shall control and measure the actual camber of each plank immediately after the release of prestress and just before erection in the field. Actual camber immediately after release shall not vary from the calculated values by +0.50". The actual camber just before erection in the field shall not exceed +1.00". If the camber limits are exceeded for any plank, the engineer shall be notified immediately to evaluate camber and provide recommendation. Prescribed recommendations shall be at no additional cost to the Owner.
4. Dead load deflection, △d, is due to the weight of the concrete deck.
5. Set the deck forms and camber the deck machine screed rails to offset the dead load deflection due to deck placement.
6. Plank seat elevations were calculated using dead load deflections of the deck so that top of precast plank will be a minimum of 1" below bottom of deck at any point in the span, allowing for precast precast depth and slab camber tolerance.

JERRY S FUJITA
LICENSED PROFESSIONAL ENGINEER
No. 11573-S
HAWAII, U.S.A.

LICENSE EXPIRES 4/30/24

THIS WORK WAS PREPARED BY ME OR UNDER MY SUPERVISION

STATE OF HAWAII
DEPARTMENT OF TRANSPORTATION
HIGHWAYS DIVISION

PRESTRESSED PLANK LONGITUDINAL SECTIONS

KAMEHAMEHA HIGHWAY
Laieloa Stream Bridge Replacement
Federal-Aid Project No. BR-083-1(58)

Scale: As Noted Date: September 2023

SHEET No. S5.1 OF 129 SHEETS

ORIGINAL PLAN	SURVEY PLOTTED BY	DATE
	DRAWN BY	
	TRACED BY	
NOTE BOOK	DESIGNED BY	
	QUANTITIES BY	
No.	CHECKED BY	

PLOT DATE: September 19, 2023 @ 01:47:50 pm
LAST UPDATE: April 12, 2023 @ 08:48:01 pm
PATH/FILENAME: P:\1751-1800\1754 Laieloa Stream Bridge - M&E Pacific\Drawings\Structural\AutoCAD_format\2023-03-15\1754_S5-1.dwg
1754 Laieloa Stream Bridge - M&E Pacific\Drawings\Structural\AutoCAD_format\2023-03-15\1754_S5-1.dwg, 9/19/2023 1:47:51 PM, tamanaha

FED. ROAD DIST. NO.	STATE	FED. AID PROJ. NO.	FISCAL YEAR	SHEET NO.	TOTAL SHEETS
HAWAII	HAW.	BR-083-1(58)	2023	64	129

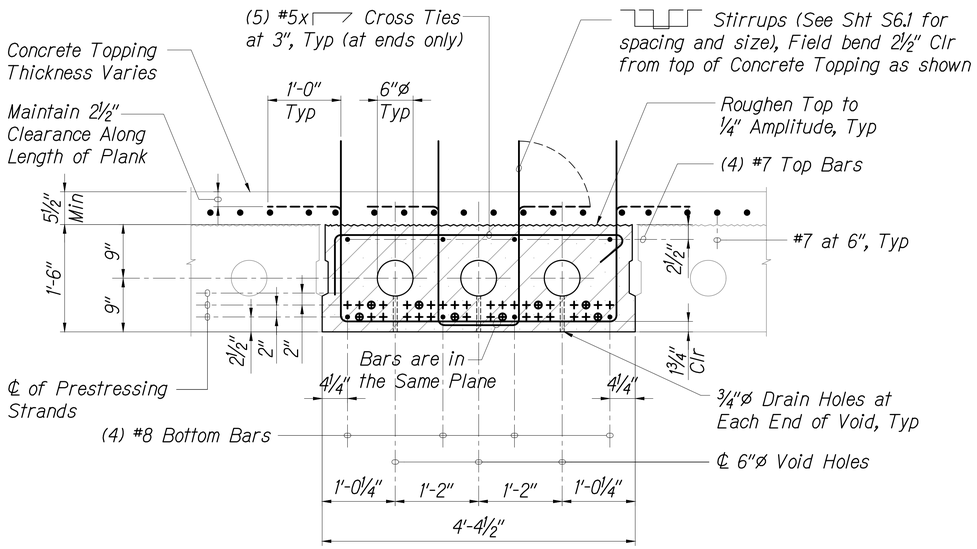

SECTION - PRESTRESSED PLANK B3-PP-1

Scale: 1" = 1'-0"

1 / S5.1, S5.2 | S5.2

Legend

+	0.6"ø Strands
⊕	0.6"ø Strands Masked 8'-0" at Each End
•	Deformed Rebar

Notes:

1. Total No. of Prestressing Strands = 36 Each Plank.
2. Minimum spacing of Prestressing Strands shall be 2" o.c.
3. Bend at appropriate angle to ensure bar is parallel with outside face of deck slab.

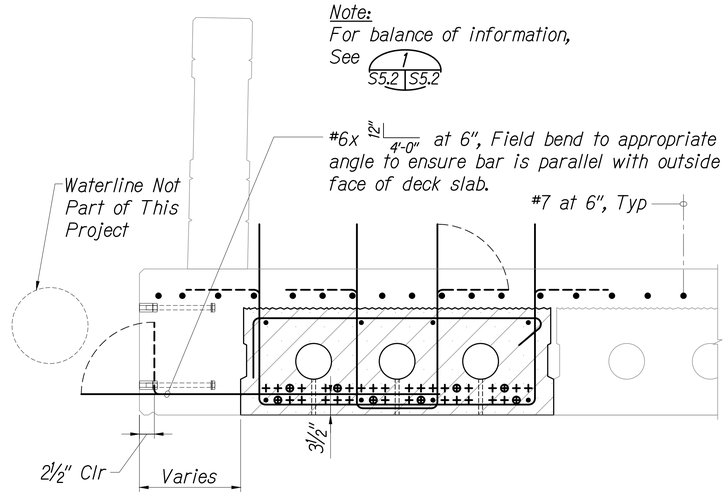

SECTION - PRESTRESSED PLANKS B3-PP-1A AND B3-PP-1B (DOWNSTREAM SIDE)

Scale: 1" = 1'-0"

2 / S5.1 | S5.2

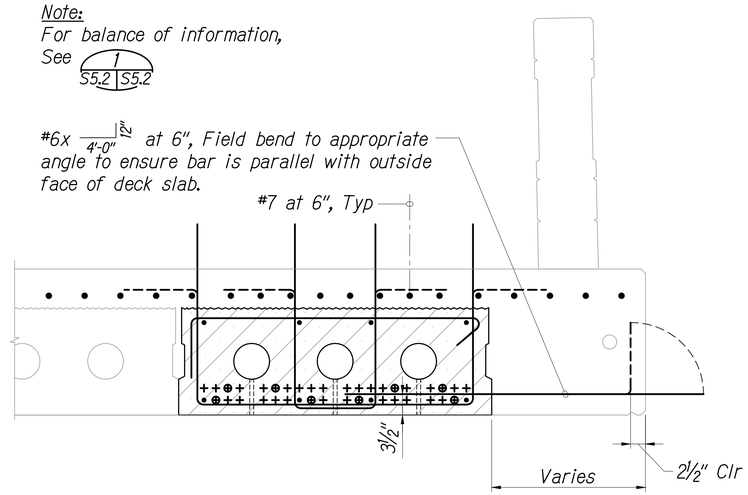

SECTION - PRESTRESSED PLANKS B3-PP-1A AND B3-PP-1B (UPSTREAM SIDE)

Scale: 1" = 1'-0"

3 / S5.1 | S5.2

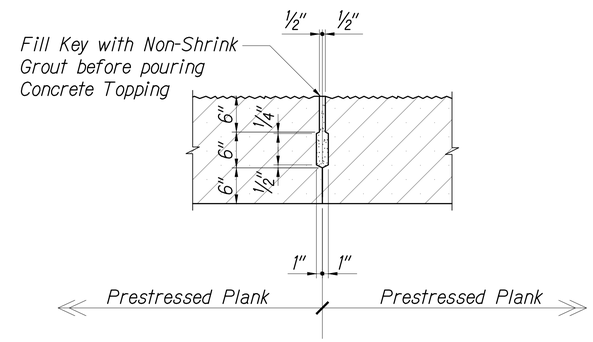

Note:
Non-Shrink Grout shall attain a minimum compressive strength of 7,000 psi prior to pouring concrete topping.

TYPICAL PLANK KEY DETAIL

Scale: 1" = 1'-0"

4 / S5.2 | S5.2

JERRY S. FUJITA — LICENSED PROFESSIONAL ENGINEER No. 11573-S — HAWAII, U.S.A.

LICENSE EXPIRES 4/30/24

THIS WORK WAS PREPARED BY ME OR UNDER MY SUPERVISION

STATE OF HAWAII
DEPARTMENT OF TRANSPORTATION
HIGHWAYS DIVISION

PRESTRESSED PLANK SECTIONS AND DETAILS

KAMEHAMEHA HIGHWAY
Laieloa Stream Bridge Replacement
Federal-Aid Project No. BR-083-1(58)

Scale: As Noted — Date: September 2023

SHEET No. S5.2 OF 129 SHEETS

ORIGINAL PLAN	SURVEY PLOTTED BY	DATE
	DRAWN BY	
	TRACED BY	
NOTE BOOK	DESIGNED BY	
	QUANTITIES BY	
No.	CHECKED BY	

PLOT DATE: September 19, 2023 @ 01:47:55 pm

LAST UPDATE: July 28, 2020 @ 11:24:33 am

PATH/FILENAME: P:\1751-1800\1754 Laieloa Stream Bridge - M&E Pacific\Drawings\Structural\AutoCAD_format\2023-03-15\1754_S5-2.dwg

1754 Laieloa Stream Bridge - M&E Pacific\Drawings\Structural\AutoCAD_format\2023-03-15\1754_S5-2.dwg, 9/19/2023 1:47:55 PM, tamanaha

FED. ROAD DIST. NO.	STATE	FED. AID PROJ. NO.	FISCAL YEAR	SHEET NO.	TOTAL SHEETS
HAWAII	HAW.	BR-083-1(58)	2023	65	129

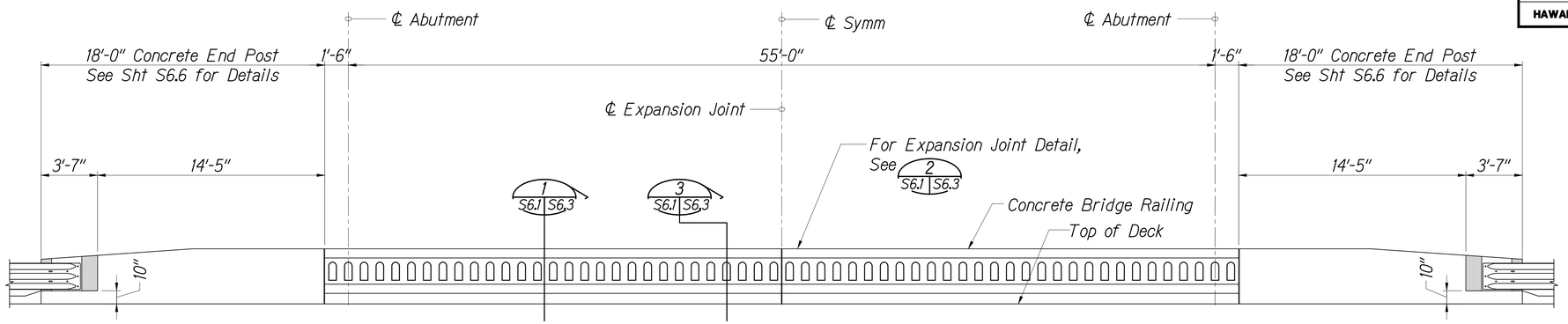

RAILING ELEVATION

1 S6.1 S6.1

Scale: 1/4" = 1'-0"

ORIGINAL PLAN	SURVEY PLOTTED BY	DATE
	DRAWN BY	"
NOTE BOOK	TRACED BY	"
	DESIGNED BY	"
No.	QUANTITIES BY	"
	CHECKED BY	"

PATH/FILENAME: P:\1751-1800\1754 Laieloa Stream Bridge - M&E Pacific\Drawings\Structural\AutoCAD_format\2023-03-15\1754_S6-1.dwg

LAST UPDATE: May 23, 2023 @ 10:53:58 am

PLOT DATE: September 19, 2023 @ 01:47:59 pm

1754 Laieloa Stream Bridge - M&E Pacific\Drawings\Structural\AutoCAD_format\2023-03-15\1754_S6-1.dwg, 9/19/2023 1:47:59 PM, tamanaha

JERRY S FUJITA
LICENSED PROFESSIONAL ENGINEER
No. 11573-S
HAWAII, U.S.A.

LICENSE EXPIRES 4/30/24

THIS WORK WAS PREPARED BY ME OR UNDER MY SUPERVISION

STATE OF HAWAII
DEPARTMENT OF TRANSPORTATION
HIGHWAYS DIVISION

BRIDGE RAILING ELEVATION

KAMEHAMEHA HIGHWAY
Laieloa Stream Bridge Replacement
Federal-Aid Project No. BR-083-1(58)

Scale: As Noted Date: September 2023

SHEET No. S6.1 OF 129 SHEETS

FED. ROAD DIST. NO.	STATE	FED. AID PROJ. NO.	FISCAL YEAR	SHEET NO.	TOTAL SHEETS
HAWAII	HAW.	BR-083-1(58)	2023	66	129

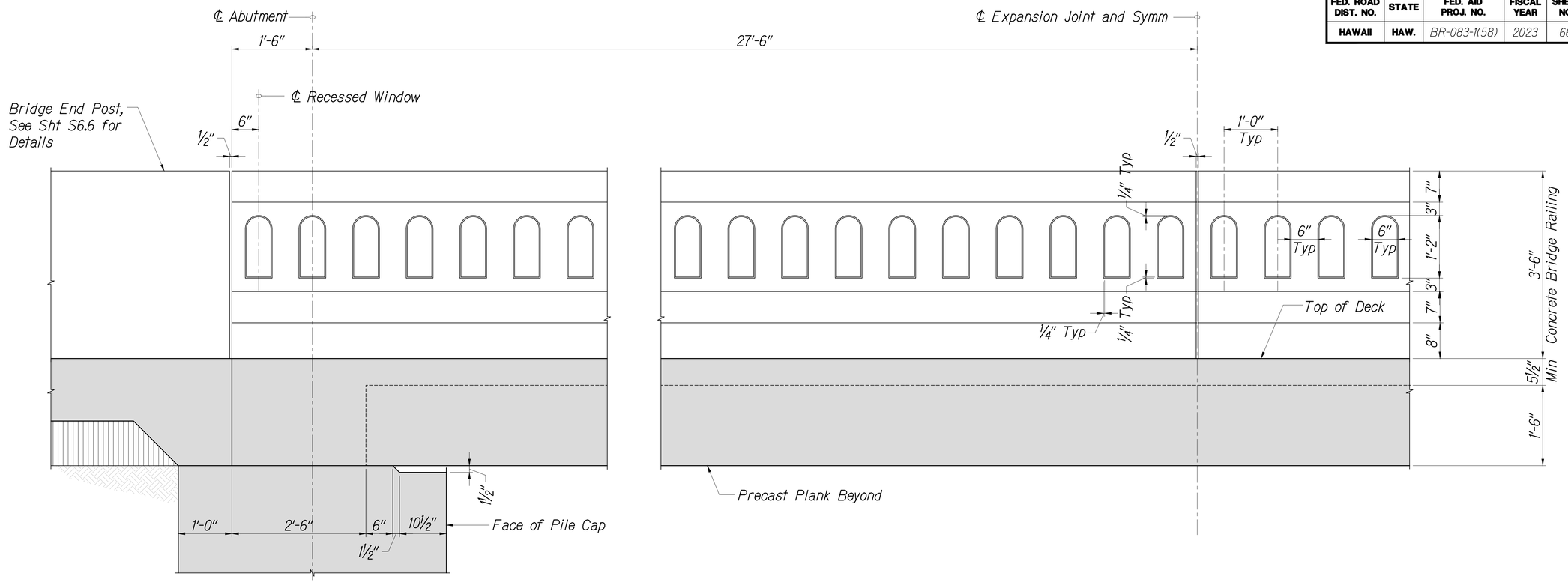

PARTIAL RAILING ELEVATION SHOWING DIMENSIONS (1 / S6.2 | S6.2)

Scale: 1" = 1'-0"

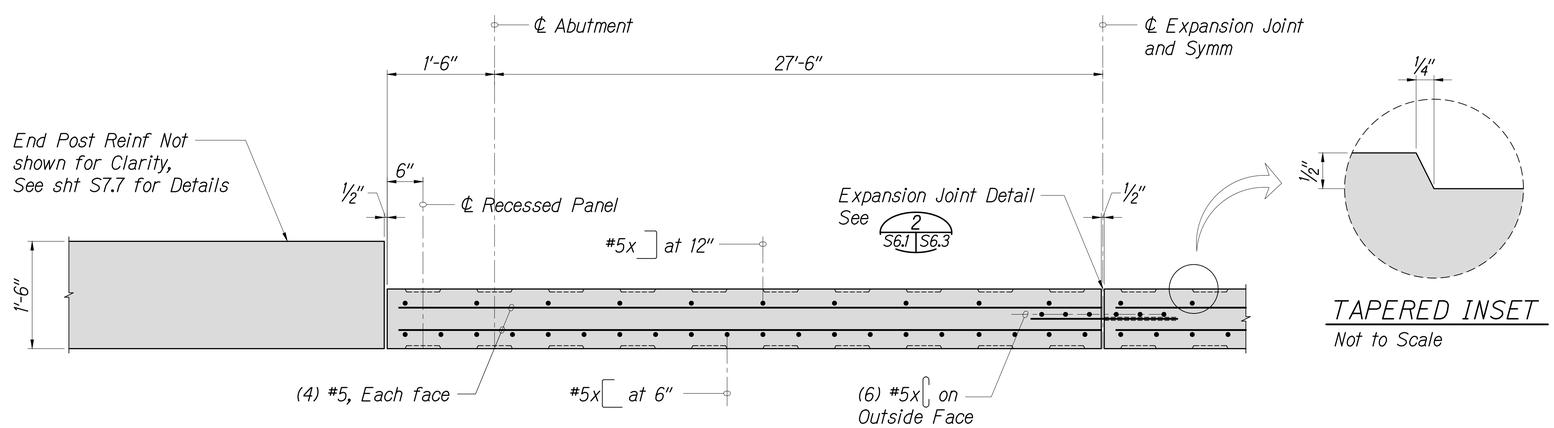

TAPERED INSET

Not to Scale

PARTIAL RAILING PLAN VIEW - SECTION (2 / S6.2 | S6.2)

Scale: 1" = 1'-0"

ORIGINAL PLAN	SURVEY PLOTTED BY	DATE
	DRAWN BY	
	TRACED BY	
NOTE BOOK	DESIGNED BY	
	QUANTITIES BY	
No.	CHECKED BY	

JERRY S FUJITA LICENSED PROFESSIONAL ENGINEER No. 11573-S HAWAII, U.S.A.

LICENSE EXPIRES 4/30/24

THIS WORK WAS PREPARED BY ME OR UNDER MY SUPERVISION

STATE OF HAWAII
DEPARTMENT OF TRANSPORTATION
HIGHWAYS DIVISION

BRIDGE NO. 3 - PARTIAL RAILING ELEVATION AND PLAN

KAMEHAMEHA HIGHWAY
Laieloa Stream Bridge Replacement
Federal-Aid Project No. BR-083-1(58)

Scale: As Noted Date: September 2023

SHEET No. S6.2 OF 129 SHEETS

PATH/FILENAME: P:\751-1800\1754 Laieloa Stream Bridge - M&E Pacific\Drawings\Structural\AutoCAD_format\2023-03-15\1754_S6-2 - S6-3.dwg, 9/19/2023 1:48:03 PM, tamanaha
PLOT DATE: September 19, 2023 @ 01:48:02 pm
LAST UPDATE: April 12, 2023 @ 06:48:18 pm

FED. ROAD DIST. NO.	STATE	FED. AID PROJ. NO.	FISCAL YEAR	SHEET NO.	TOTAL SHEETS
HAWAII	HAW.	BR-083-1(58)	2023	67	129

Notes:
1. Concrete Topping and Precast Plank reinforcing not shown for Clarity.
2. For Balance of Information, See 2 S6.3 | S6.3

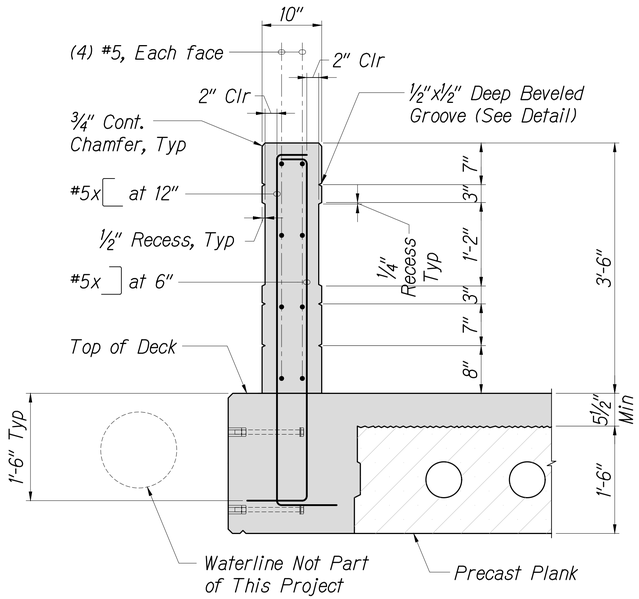

TYPCIAL SECTION 1 S6.1 | S6.3
Scale: 1" = 1'-0"

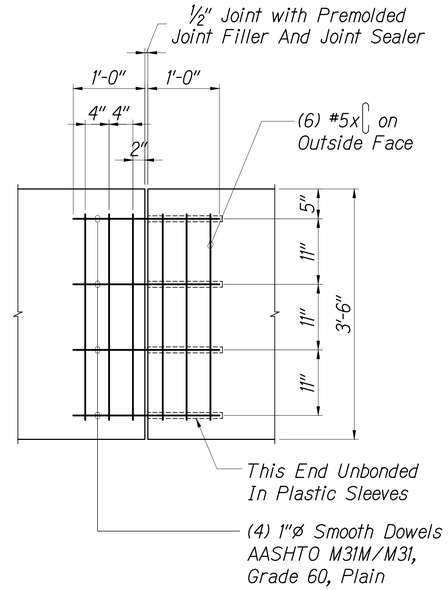

EXPANSION JOINT DETAIL 2 S6.1 | S6.3
Scale: 1" = 1'-0"

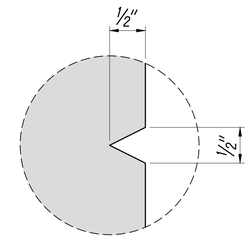

TYPICAL BEVELED GROOVE DETAIL
Not to Scale

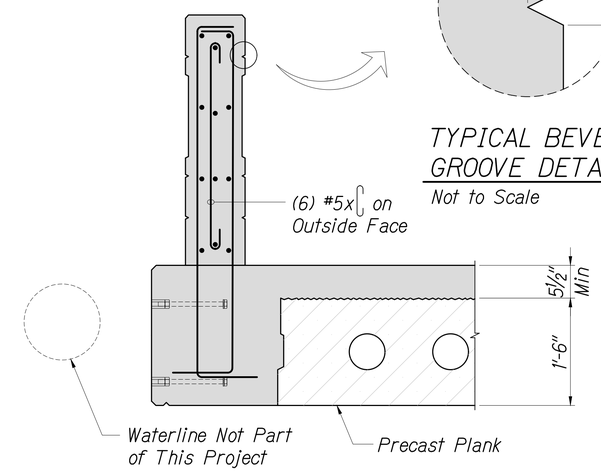

SECTION AT EXPANSION JOINT 3 S6.1 | S6.3
Scale: 1" = 1'-0"

JERRY S FUJITA
LICENSED PROFESSIONAL ENGINEER
No. 11573-S
HAWAII, U.S.A.

LICENSE EXPIRES 4/30/24

THIS WORK WAS PREPARED BY ME OR UNDER MY SUPERVISION

STATE OF HAWAII
DEPARTMENT OF TRANSPORTATION
HIGHWAYS DIVISION

BRIDGE NO. 3 - RAILING SECTIONS AND DETAILS

KAMEHAMEHA HIGHWAY
Laieloa Stream Bridge Replacement
Federal-Aid Project No. BR-083-1(58)

Scale: As Noted Date: September 2023

SHEET No. S6.3 OF 129 SHEETS

ORIGINAL PLAN	SURVEY PLOTTED BY	DATE
	DRAWN BY	"
	TRACED BY	"
NOTE BOOK	DESIGNED BY	"
	QUANTITIES BY	"
No.	CHECKED BY	"

PATH/FILENAME: P:\1751-1800\1754 Laieloa Stream Bridge - M&E Pacific\Drawings\Structural\AutoCAD_format\2023-03-15\1754_S6-2 - S6-3.dwg

PLOT DATE: September 19, 2023 @ 01:48:04 pm

LAST UPDATE: April 12, 2023 @ 06:46:18 pm

1754 Laieloa Stream Bridge - M&E Pacific\Drawings\Structural\AutoCAD_format\2023-03-15\1754_S6-2 - S6-3.dwg, 9/19/2023 1:48:04 PM, tamanaha

FED. ROAD DIST. NO.	STATE	FED. AID PROJ. NO.	FISCAL YEAR	SHEET NO.	TOTAL SHEETS
HAWAII	HAW.	BR-083-1(58)	2023	68	129

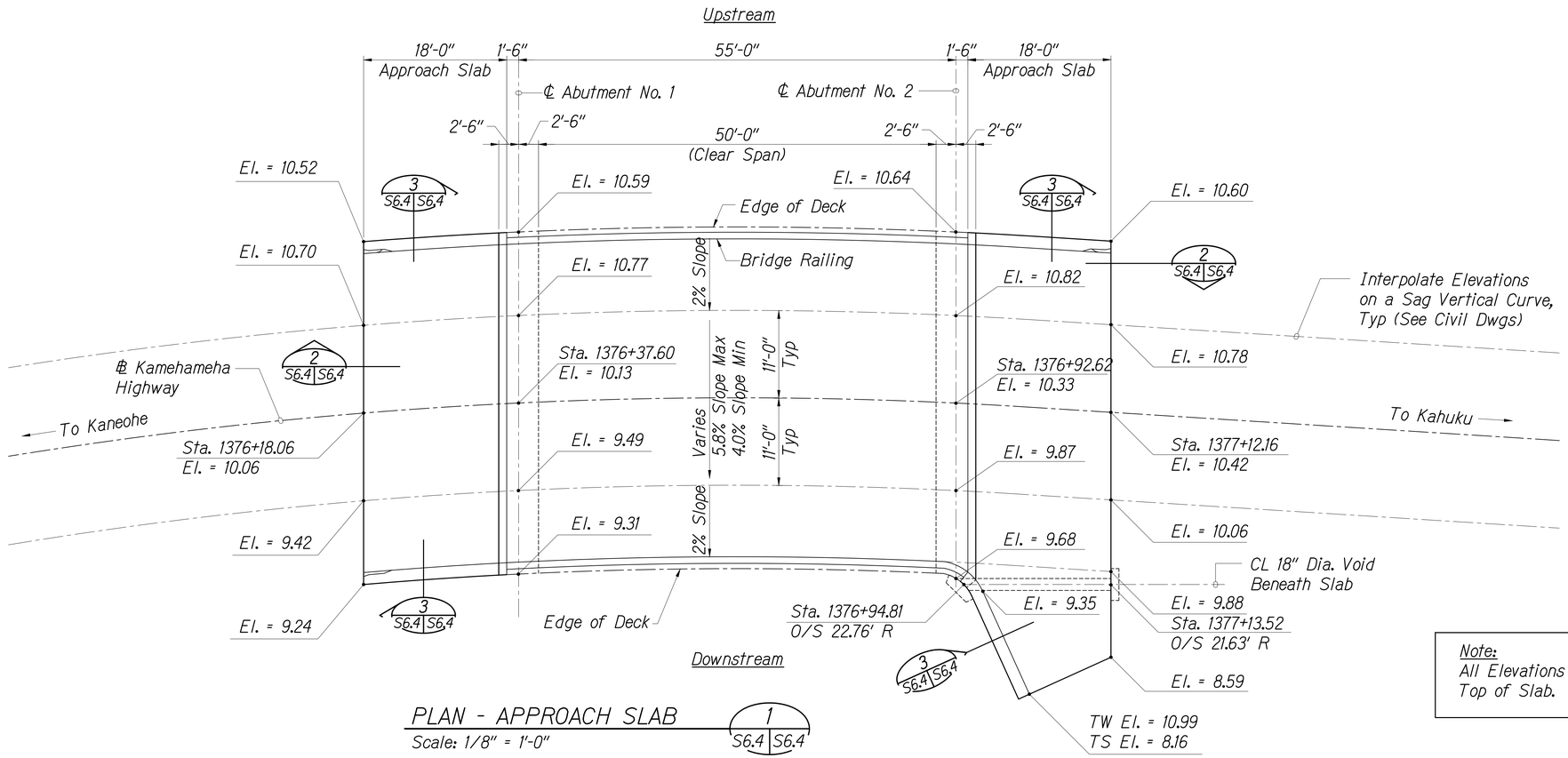

PLAN - APPROACH SLAB (1 / S6.4 | S6.4)

Scale: 1/8" = 1'-0"

Note:
All Elevations are at the Top of Slab.

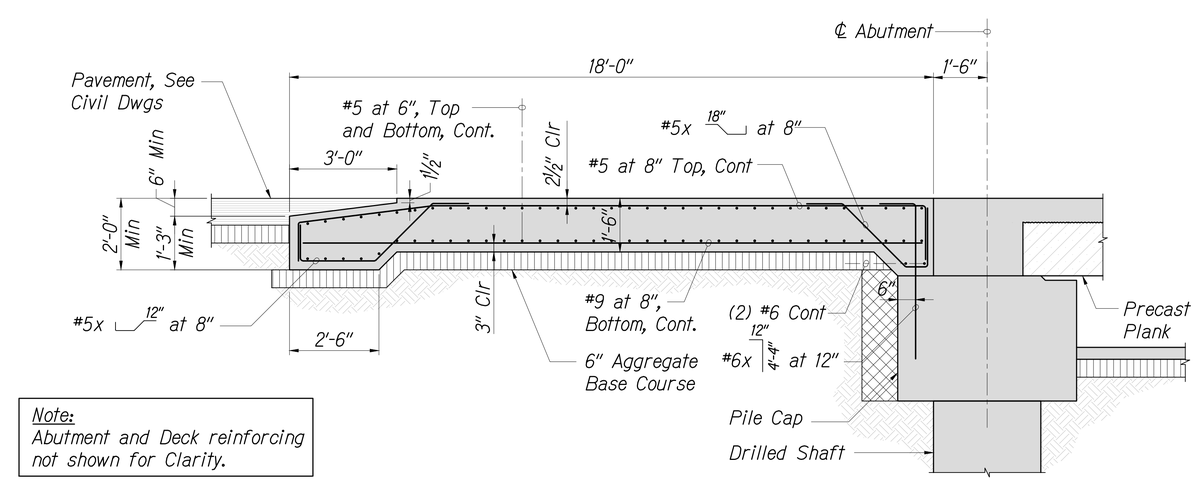

Note:
Abutment and Deck reinforcing not shown for Clarity.

TYPICAL APPROACH SLAB SECTION (2 / S6.4 | S6.4)

Scale: 1/2" = 1'-0"

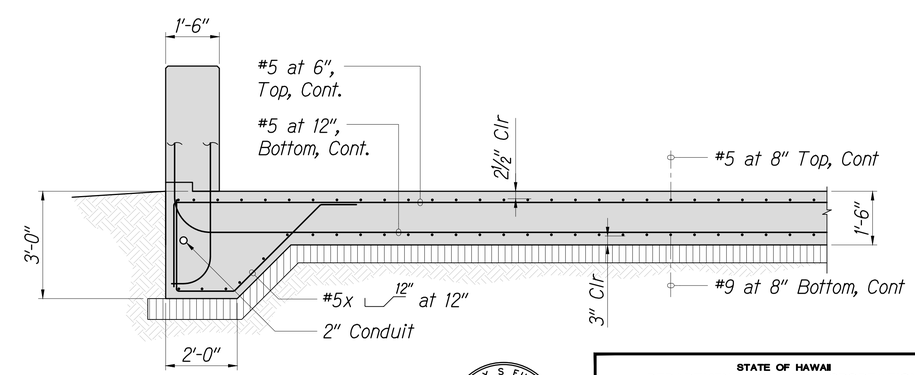

SECTION (3 / S6.4 | S6.4)

Scale: 1/2" = 1'-0"

JERRY S. FUJITA LICENSED PROFESSIONAL ENGINEER No. 11573-S HAWAII, U.S.A.

LICENSE EXPIRES 4/30/24

THIS WORK WAS PREPARED BY ME OR UNDER MY SUPERVISION

STATE OF HAWAII
DEPARTMENT OF TRANSPORTATION
HIGHWAYS DIVISION

APPROACH SLAB
PLAN AND SECTIONS

KAMEHAMEHA HIGHWAY
Laieloa Stream Bridge Replacement
Federal-Aid Project No. BR-083-1(58)

Scale: As Noted Date: September 2023

SHEET No. S6.4 OF 129 SHEETS

ORIGINAL PLAN	SURVEY PLOTTED BY	DATE
	DRAWN BY	
	TRACED BY	
NOTE BOOK	DESIGNED BY	
	QUANTITIES BY	
No.	CHECKED BY	

PLOT DATE: September 19, 2023 @ 01:48:07 pm

LAST UPDATE: July 26, 2023 @ 11:53:22 am

PATH/FILENAME: P:\1751-1800\1754 Laieloa Stream Bridge - M&E Pacific\Drawings\Structural\AutoCAD_format\2023-03-15\1754_S6-4 - S6-5.dwg, 9/19/2023 1:48:08 PM, tamanaha

1754 Laieloa Stream Bridge - M&E Pacific\Drawings\Structural\AutoCAD_format\2023-03-15\1754_S6-4 - S6-5.dwg

FED. ROAD DIST. NO.	STATE	FED. AID PROJ. NO.	FISCAL YEAR	SHEET NO.	TOTAL SHEETS
HAWAII	HAW.	BR-083-1(58)	2023	69	129

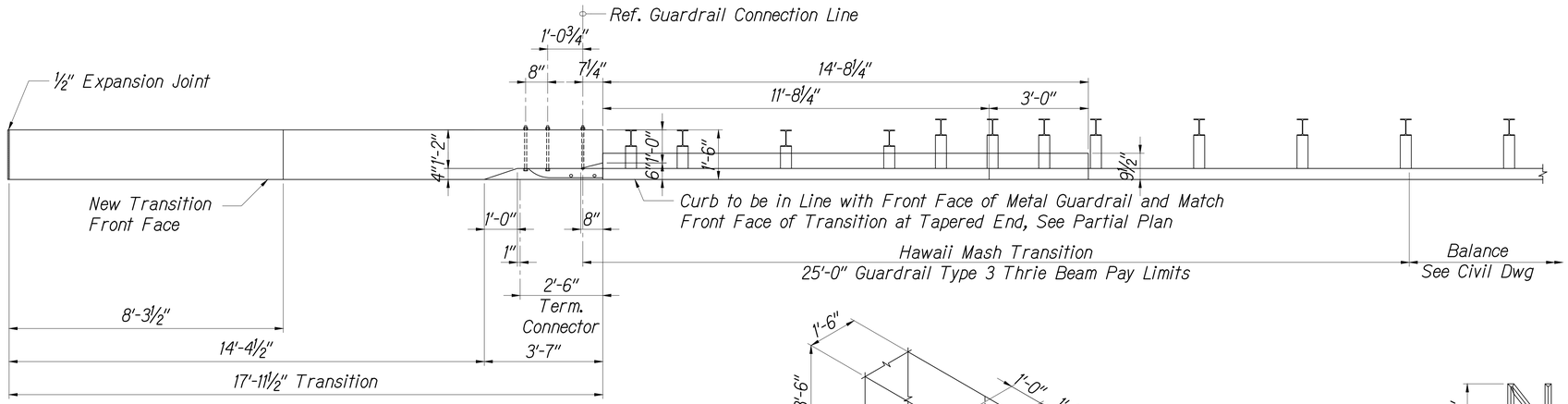

PLAN 1
Scale: 1/2" - 1'-0" S6.5 S6.5

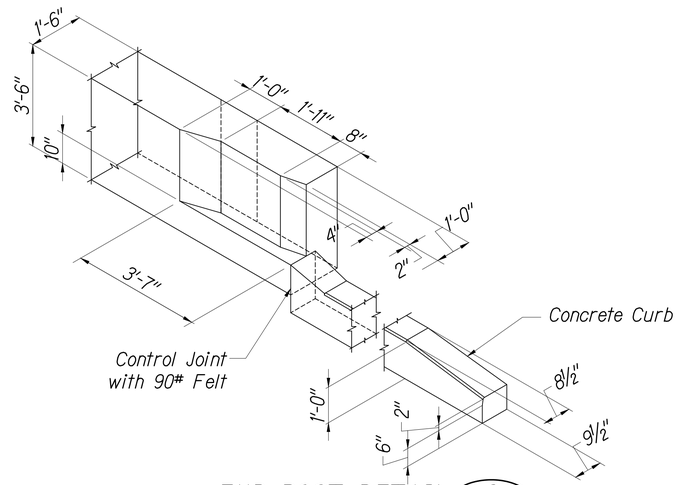

END POST DETAIL 3
Scale: 1/2" = 1'-0" S6.5 S6.5

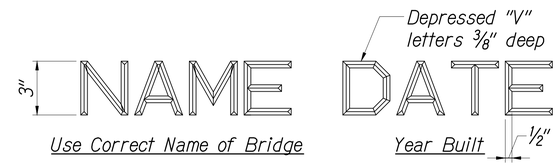

Notes:
1. Unless otherwise directed by the engineer, the bridge name and date shall be placed at the "trailing" end post on each side of the roadway.
2. Exact details and spacing of letter and figures and location shall be as directed by the engineer. gothic letters and figures approximating dimensions shown will be acceptable if approved by the engineer.

TYPICAL DETAIL OF LETTERS AND FIGURES AT CONCRETE END POST

BRIDGE IDENTIFICATION DETAIL

Not to Scale

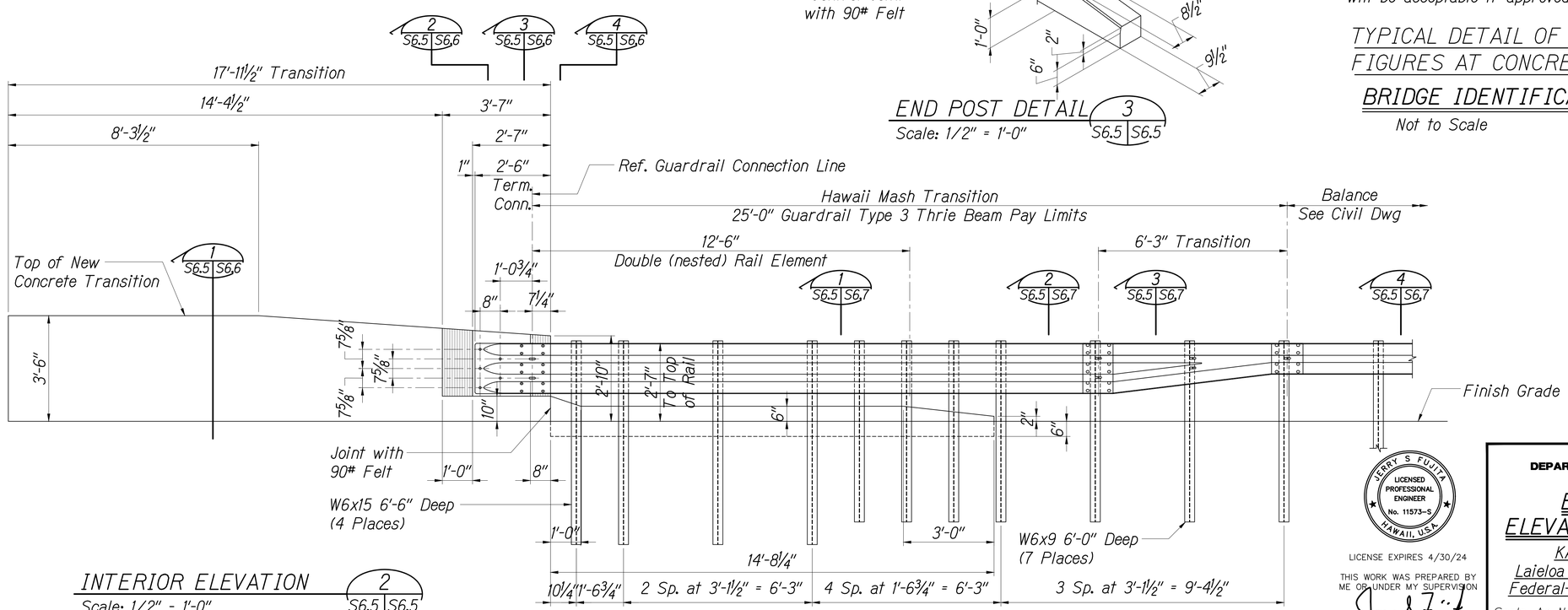

INTERIOR ELEVATION 2
Scale: 1/2" - 1'-0" S6.5 S6.5

JERRY S FUJITA
LICENSED PROFESSIONAL ENGINEER
No. 11573-S
HAWAII, U.S.A.

LICENSE EXPIRES 4/30/24

THIS WORK WAS PREPARED BY ME OR UNDER MY SUPERVISION

STATE OF HAWAII
DEPARTMENT OF TRANSPORTATION
HIGHWAYS DIVISION

END POST PLAN
ELEVATION AND SECTIONS

KAMEHAMEHA HIGHWAY
Laieloa Stream Bridge Replacement
Federal-Aid Project No. BR-083-1(58)

Scale: As Noted Date: September 2023

SHEET No. S6.5 OF 129 SHEETS

ORIGINAL PLAN
SURVEY PLOTTED BY
DRAWN BY
TRACED BY
DESIGNED BY
QUANTITIES BY
CHECKED BY
DATE
NOTE BOOK
No.

PLOT DATE: September 19, 2023 @ 01:48:09 pm
LAST UPDATE: July 26, 2023 @ 11:53:22 am
PATH/FILENAME: P:\1751-1800\1754 Laieloa Stream Bridge - M&E Pacific\Drawings\Structural\AutoCAD_format\2023-03-15\1754_S6-4 - S6-5.dwg, 9/19/2023 1:48:09 PM, tamanaha

FED. ROAD DIST. NO.	STATE	FED. AID PROJ. NO.	FISCAL YEAR	SHEET NO.	TOTAL SHEETS
HAWAII	HAW.	BR-083-1(58)	2023	70	129

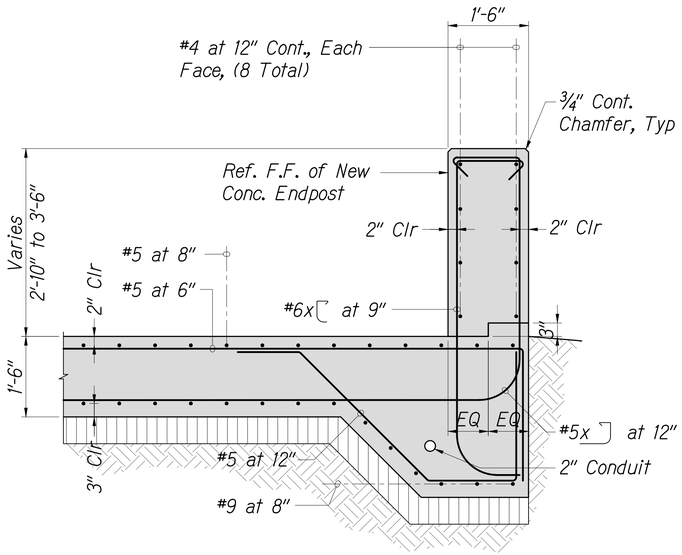

SECTION 1 (S6.5 | S6.6)
Scale: 3/4" = 1'-0"

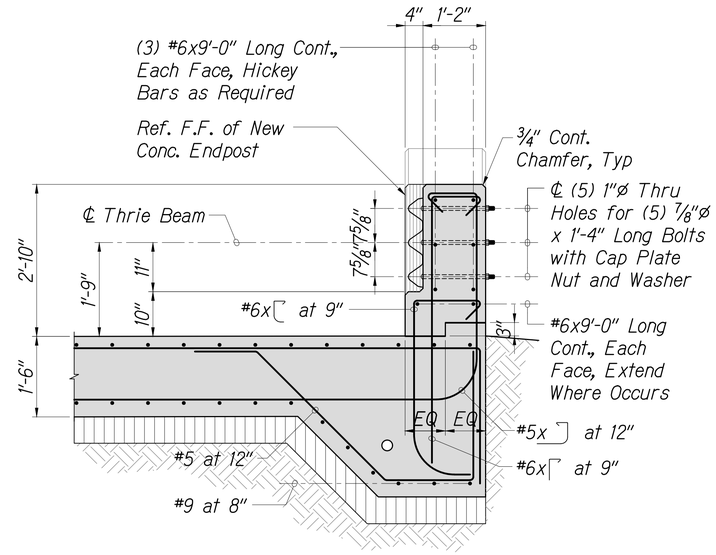

SECTION 2 (S6.5 | S6.6)
Scale: 3/4" = 1'-0"

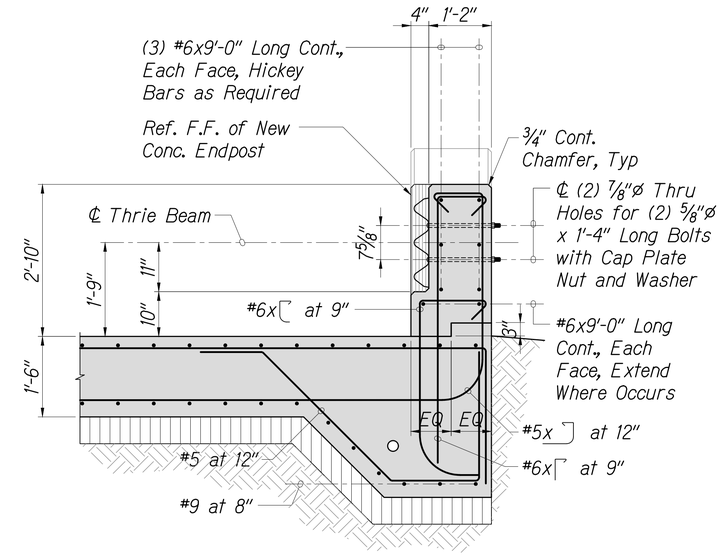

SECTION 3 (S6.5 | S6.6)
Scale: 3/4" = 1'-0"

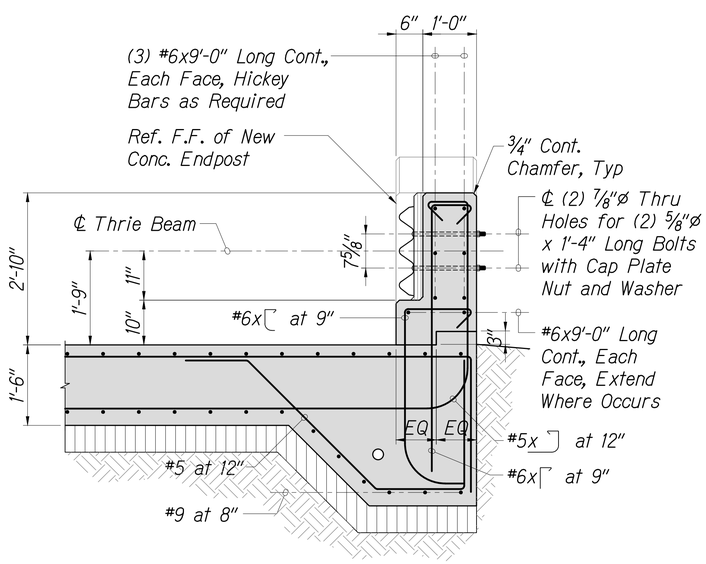

SECTION 4 (S6.5 | S6.6)
Scale: 3/4" = 1'-0"

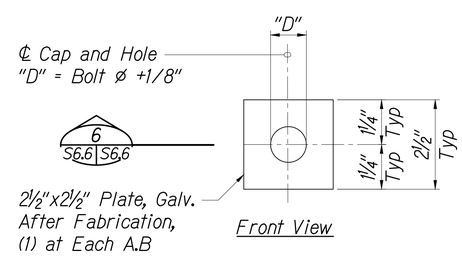

CAP (BEARING) PLATE DETAIL 5 (S6.6 | S6.6)
Scale: 6" = 1'-0"

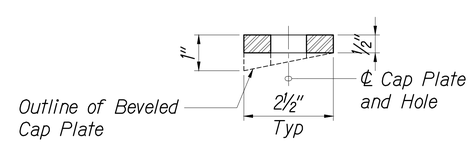

SECTION 6 (S6.6 | S6.6)
Scale: 6" = 1'-0"

Note:
For Balance of Information, See 3 (S6.4 | S6.4)

JERRY S FUJITA
LICENSED PROFESSIONAL ENGINEER
No. 11573-S
HAWAII, U.S.A.

LICENSE EXPIRES 4/30/24

THIS WORK WAS PREPARED BY ME OR UNDER MY SUPERVISION

STATE OF HAWAII
DEPARTMENT OF TRANSPORTATION
HIGHWAYS DIVISION

END POST
SECTIONS AND DETAILS

KAMEHAMEHA HIGHWAY
Laieloa Stream Bridge Replacement
Federal-Aid Project No. BR-083-1(58)

Scale: As Noted Date: September 2023

SHEET No. S6.6 OF 129 SHEETS

ORIGINAL PLANS	SURVEY PLOTTED BY	DATE
	DRAWN BY	
	TRACED BY	
NOTE BOOK	DESIGNED BY	
	QUANTITIES BY	
No.	CHECKED BY	

PLOT DATE: September 19, 2023 @ 01:48:12 pm
LAST UPDATE: July 28, 2023 @ 11:53:34 am
PATH/FILENAME: P:\1751-1800\1754 Laieloa Stream Bridge - M&E Pacific\Drawings\Structural\AutoCAD_format\2023-03-15\1754_S6-6.dwg
1754 Laieloa Stream Bridge - M&E Pacific\Drawings\Structural\AutoCAD_format\2023-03-15\1754_S6-6.dwg, 9/19/2023 1:48:13 PM, tamamaha

FED. ROAD DIST. NO.	STATE	FED. AID PROJ. NO.	FISCAL YEAR	SHEET NO.	TOTAL SHEETS
HAWAII	HAW.	BR-083-1(58)	2023	71	129

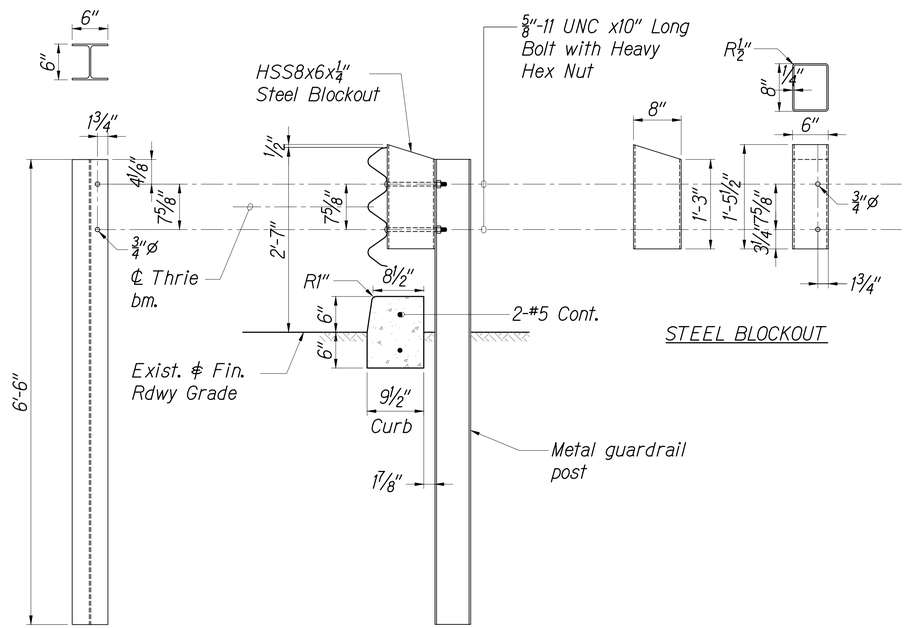

SECTION 1 (S6.5 | S6.7)
Scale: 1" = 1'-0"

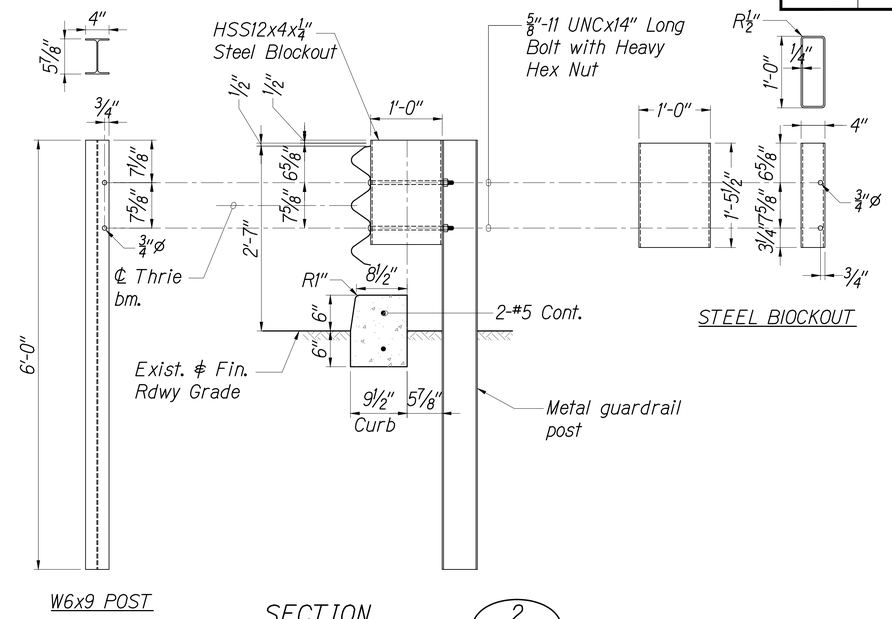

SECTION 2 (S6.5 | S6.7)
Scale: 1" = 1'-0"

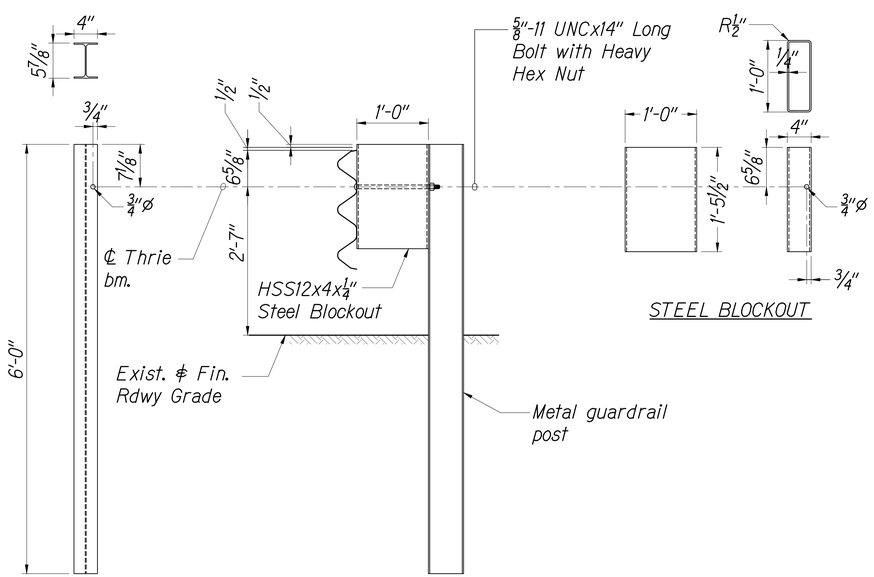

SECTION 3 (S6.5 | S6.7)
Scale: 1" = 1'-0"

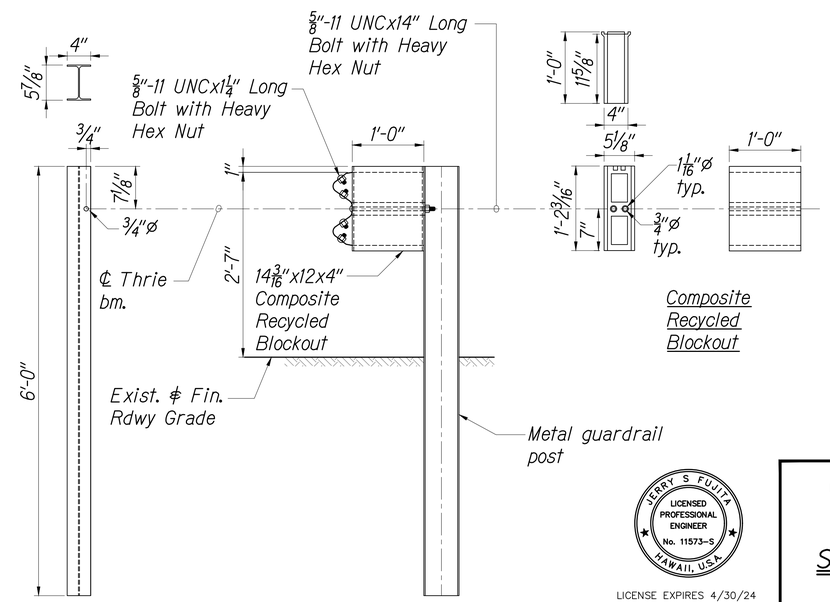

SECTION 4 (S6.5 | S6.7)
Scale: 1" = 1'-0"

JERRY S FUJITA
LICENSED PROFESSIONAL ENGINEER
No. 11573-S
HAWAII, U.S.A.

LICENSE EXPIRES 4/30/24

THIS WORK WAS PREPARED BY ME OR UNDER MY SUPERVISION

STATE OF HAWAII
DEPARTMENT OF TRANSPORTATION
HIGHWAYS DIVISION

THRIE BEAM SECTIONS AND DETAILS

KAMEHAMEHA HIGHWAY
Laieloa Stream Bridge Replacement
Federal-Aid Project No. BR-083-1(58)

Scale: As Noted Date: September 2023

SHEET No. S6.7 OF 129 SHEETS

ORIGINAL PLAN	SURVEY PLOTTED BY	DATE
	DRAWN BY	"
	TRACED BY	"
NOTE BOOK	DESIGNED BY	"
	QUANTITIES BY	"
No.	CHECKED BY	"

PWN/FILENAME: P:\1751-1800\1754 Laieloa Stream Bridge - M&E Pacific\Drawings\Structural\AutoCAD_format\2023-03-15\1754_S6-7.dwg

LAST UPDATE: April 12, 2020 @ 06:48:35 pm

PLOT DATE: September 19, 2023 @ 01:48:17 pm

1754 Laieloa Stream Bridge - M&E Pacific\Drawings\Structural\AutoCAD_format\2023-03-15\1754_S6-7.dwg, 9/19/2023 1:48:17 PM, tamanaha

FED. ROAD DIST. NO.	STATE	FED. AID PROJ. NO.	FISCAL YEAR	SHEET NO.	TOTAL SHEETS
HAWAII	HAW.	BR-083-1(58)	2023	72	129

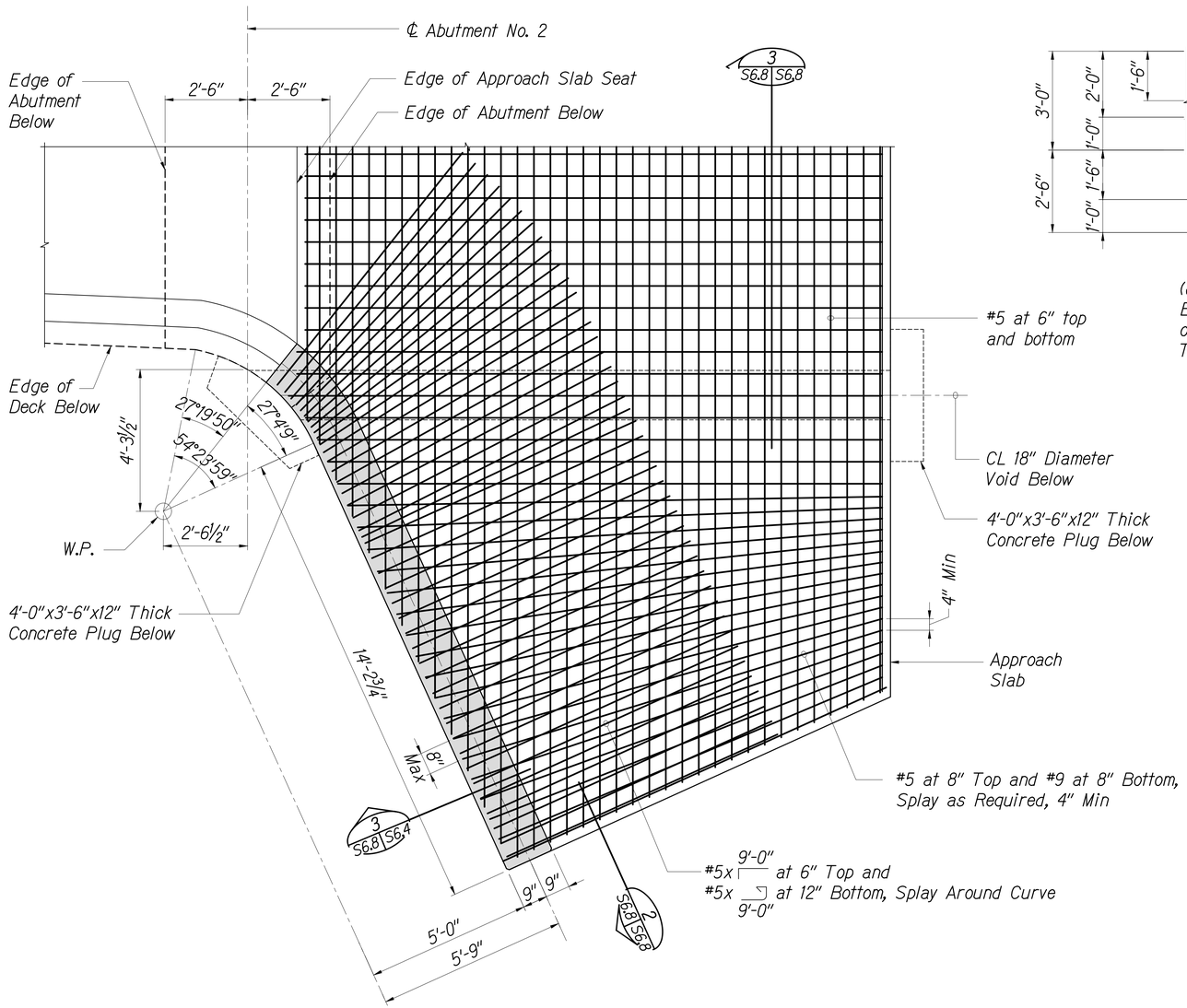

CURVED END POST PLAN (1 / S1.1 | S6.8)
Scale: 1/2" = 1'-0"

Note:
Approach Slab Reinforcing Not Shown for Clarity

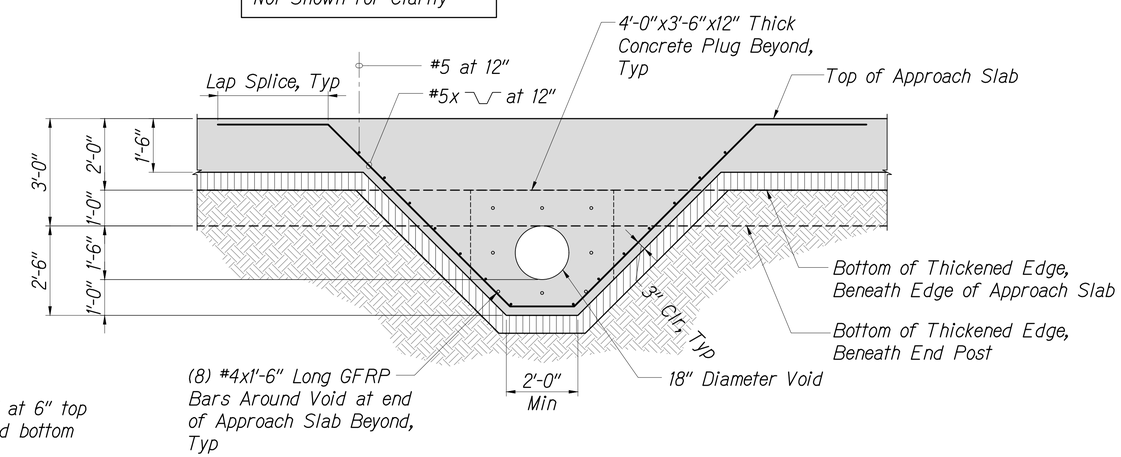

SECTION (3 / S6.8 | S6.8)
Scale: 1/2" = 1'-0"

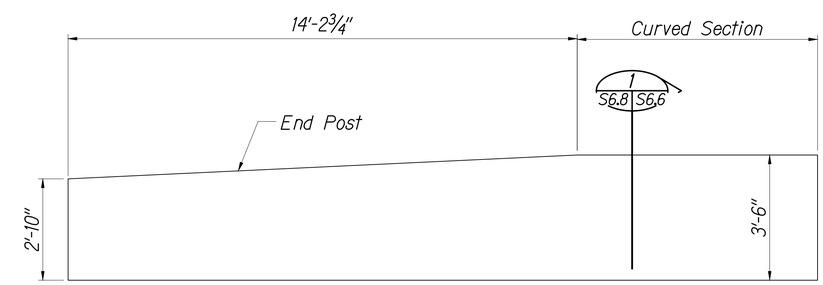

ELEVATION (2 / S6.8 | S6.8)
Scale: 1/2" = 1'-0"

ORIGINAL PLAN		
	SURVEY PLOTTED BY	DATE
	DRAWN BY	
	TRACED BY	
NOTE BOOK	DESIGNED BY	
	QUANTITIES BY	
No.	CHECKED BY	

PLOT DATE: September 19, 2023 @ 01:48:21 pm
LAST UPDATE: April 12, 2023 @ 08:48:40 pm
PATH/FILENAME: P:\1751-1800\1754 Laieloa Stream Bridge - M&E Pacific\Drawings\Structural\AutoCAD_format\2023-03-15\1754_S6-8.dwg

LICENSE EXPIRES 4/30/24

THIS WORK WAS PREPARED BY ME OR UNDER MY SUPERVISION

STATE OF HAWAII
DEPARTMENT OF TRANSPORTATION
HIGHWAYS DIVISION

CURVED END POST AND WALL PLANS AND DETAILS

KAMEHAMEHA HIGHWAY
Laieloa Stream Bridge Replacement
Federal-Aid Project No. BR-083-1(58)

Scale: As Noted Date: September 2023

SHEET No. S6.8 OF 129 SHEETS

FED. ROAD DIST. NO.	STATE	FED. AID PROJ. NO.	FISCAL YEAR	SHEET NO.	TOTAL SHEETS
HAWAII	HAW.	BR-083-1(58)	2023	73	129

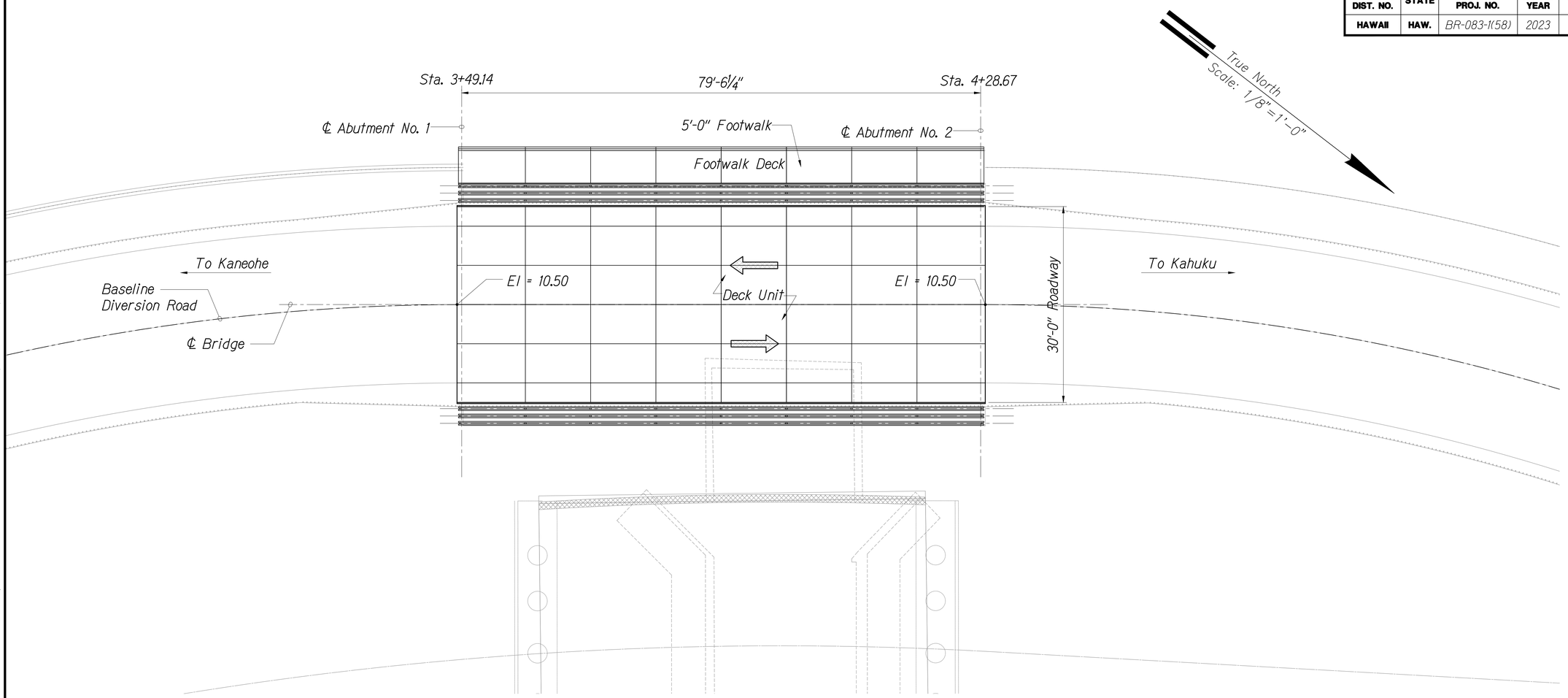

NOTES:

1. Diversion bridge shall be capable of supporting HL-93 loading.
2. Minimum lane width shall be 12'-0".
3. Footwalk shall be capable supporting 100 PSF live load.
4. Footwalk shall be coated with skid resistant surface.
5. Provide AASHTO MASH TL-3 rated guardrails and transitions on and off bridge.
6. Bridge deck shall be covered with 2" asphalt overlay, see civil drawings for details.

DIVERSION ROAD PLAN

Scale: 1/8" = 1'-0"

1
S7.1 | S7.1

JERRY S FUJITA
LICENSED PROFESSIONAL ENGINEER
No. 11573-S
HAWAII, U.S.A.

LICENSE EXPIRES 4/30/24

THIS WORK WAS PREPARED BY ME OR UNDER MY SUPERVISION

STATE OF HAWAII
DEPARTMENT OF TRANSPORTATION
HIGHWAYS DIVISION

DIVERSION BRIDGE PLAN

KAMEHAMEHA HIGHWAY
Laieloa Stream Bridge Replacement
Federal-Aid Project No. BR-083-1(58)

Scale: As Noted Date: September 2023

SHEET No. S7.1 OF 129 SHEETS

ORIGINAL PLAN	SURVEY PLOTTED BY	DATE
	DRAWN BY	
	TRACED BY	
NOTE BOOK	DESIGNED BY	
	QUANTITIES BY	
No.	CHECKED BY	

PLOT DATE: September 19, 2023 @ 01:48:24 pm

LAST UPDATE: May 23, 2023 @ 10:53:53 am

PATH/FILENAME: P:\1751-1800\1754 Laieloa Stream Bridge - M&E Pacific\Drawings\Structural\AutoCAD_format\2023-03-15\1754_S7-1.dwg

1754 Laieloa Stream Bridge - M&E Pacific\Drawings\Structural\AutoCAD_format\2023-03-15\1754_S7-1.dwg, 9/19/2023 1:48:24 PM, tamanaha

FED. ROAD DIST. NO.	STATE	FED. AID PROJ. NO.	FISCAL YEAR	SHEET NO.	TOTAL SHEETS
HAWAII	HAW.	BR-083-1(58)	2023	74	129

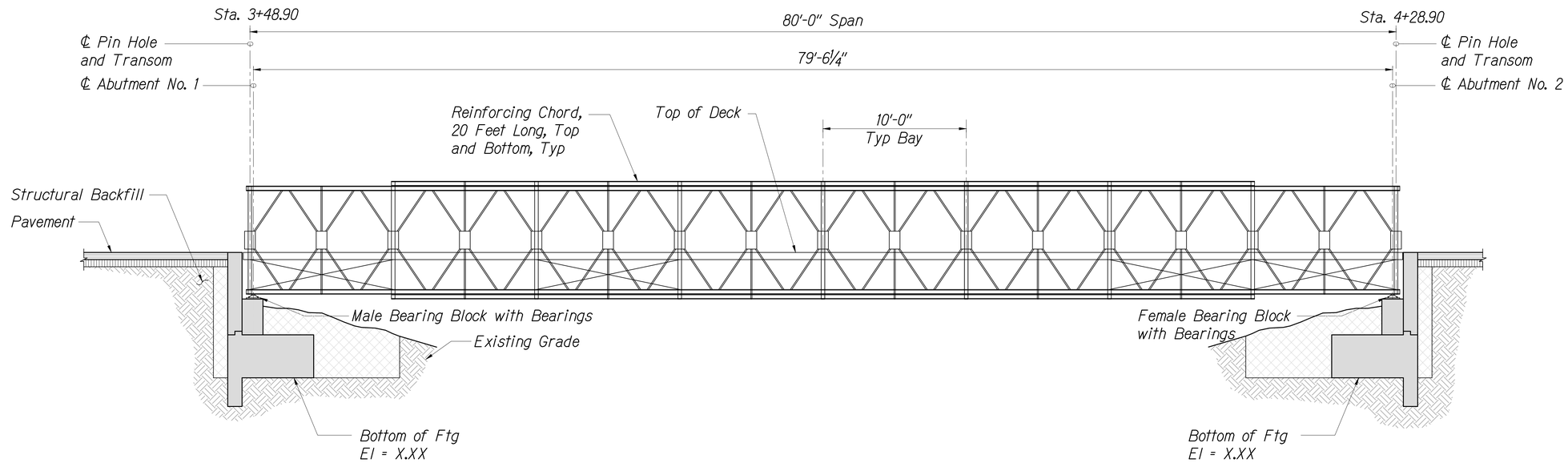

DIVERSION BRIDGE ELEVATION (1 / S7.2 | S7.2)

Scale 1/4" = 1'-0"

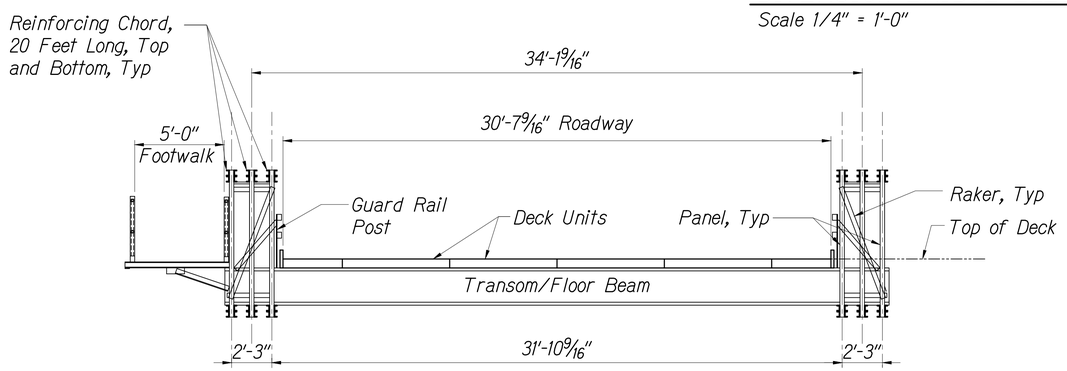

DIVERSION BRIDGE CROSS SECTION (2 / S7.2 | S7.2)

Scale 1/4" = 1'-0"

ORIGINAL PLAN	SURVEY PLOTTED BY	DATE
	DRAWN BY	
	TRACED BY	
NOTE BOOK	DESIGNED BY	
	QUANTITIES BY	
No.	CHECKED BY	

PLOT DATE: September 19, 2023 @ 01:48:29 pm

LAST UPDATE: April 11, 2023 @ 12:28:50 pm

PATH/FILENAME: P:\1751-1800\1754 Laieloa Stream Bridge - M&E Pacific\Drawings\Structural\AutoCAD_format\2023-03-15\1754_S7-2 -S7-4.dwg

LICENSE EXPIRES 4/30/24

THIS WORK WAS PREPARED BY ME OR UNDER MY SUPERVISION

STATE OF HAWAII
DEPARTMENT OF TRANSPORTATION
HIGHWAYS DIVISION

DIVSERSION BRIDGE ELEVATION AND SECTIONS

KAMEHAMEHA HIGHWAY
Laieloa Stream Bridge Replacement
Federal-Aid Project No. BR-083-1(58)

Scale: As Noted Date: September 2023

SHEET No. S7.2 OF 129 SHEETS

1754 Laieloa Stream Bridge - M&E Pacific\Drawings\Structural\AutoCAD_format\2023-03-15\1754_S7-2 -S7-4.dwg, 9/19/2023 1:48:28 PM, tamanaha

FED. ROAD DIST. NO.	STATE	FED. AID PROJ. NO.	FISCAL YEAR	SHEET NO.	TOTAL SHEETS
HAWAII	HAW.	BR-083-1(58)	2023	75	129

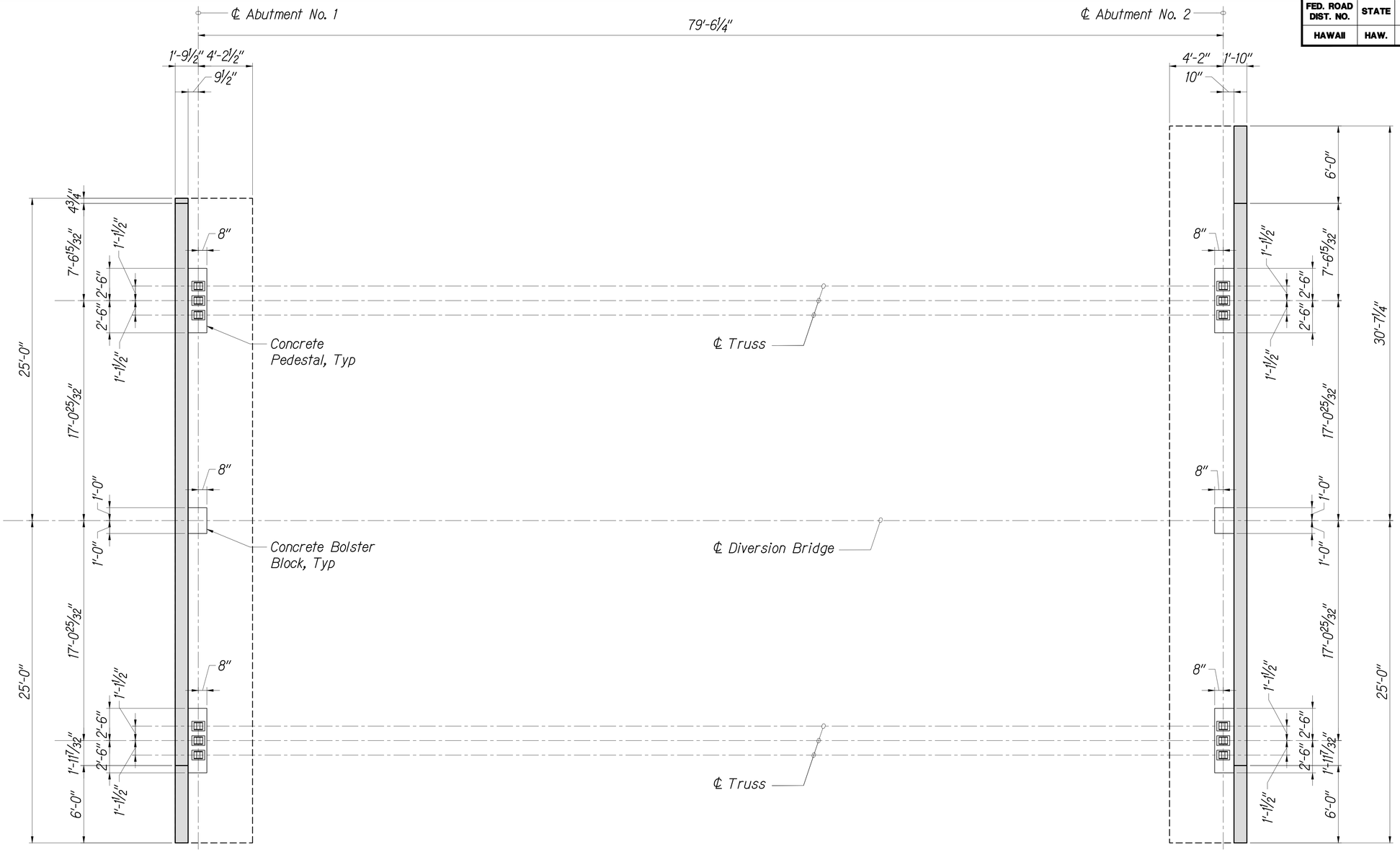

DIVERSION ROAD FOUNDATION LAYOUT PLAN

Scale: 1/4" = 1'-0"

1 / S7.3 | S7.3

JERRY S FUJITA
LICENSED PROFESSIONAL ENGINEER
No. 11573-S
HAWAII, U.S.A.

LICENSE EXPIRES 4/30/24

THIS WORK WAS PREPARED BY ME OR UNDER MY SUPERVISION

STATE OF HAWAII
DEPARTMENT OF TRANSPORTATION
HIGHWAYS DIVISION

DIVERSION BRIDGE ELEVATION AND SECTIONS

KAMEHAMEHA HIGHWAY
Laieloa Stream Bridge Replacement
Federal-Aid Project No. BR-083-1(58)

Scale: As Noted Date: September 2023

SHEET No. S7.3 OF 129 SHEETS

ORIGINAL PLAN | SURVEY PLOTTED BY | DATE
DRAWN BY | " | "
TRACED BY | " | "
NOTE BOOK | DESIGNED BY | " | "
QUANTITIES BY | " | "
No. | CHECKED BY | " | "

PWN/FILENAME: P:\751-1800\1754 Laieloa Stream Bridge - M&E Pacific\Drawings\Structural\AutoCAD_format\2023-03-15\1754_S7-2_S7-4.dwg, 9/19/2023 1:48:29 PM, tamanaha

LAST UPDATE: April 11, 2023 @ 12:36:50 am

PLOT DATE: September 19, 2023 @ 01:48:29 pm

1754 Laieloa Stream Bridge - M&E Pacific\Drawings\Structural\AutoCAD_format\2023-03-15\1754_S7-2_S7-4.dwg, 9/19/2023 1:48:29 PM, tamanaha

FED. ROAD DIST. NO.	STATE	FED. AID PROJ. NO.	FISCAL YEAR	SHEET NO.	TOTAL SHEETS
HAWAII	HAW.	BR-083-1(58)	2023	76	129

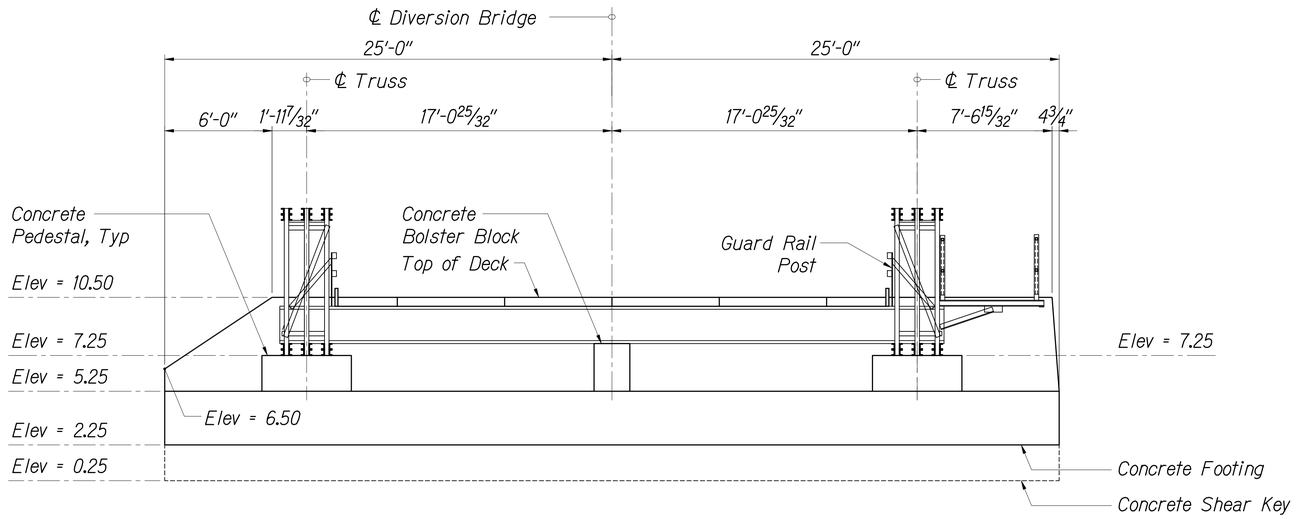

DIVERSION BRIDGE ABUTMENT NO. 1 ELEVATION (1 / S7.4 | S7.4)

Scale 1/4" = 1'-0"

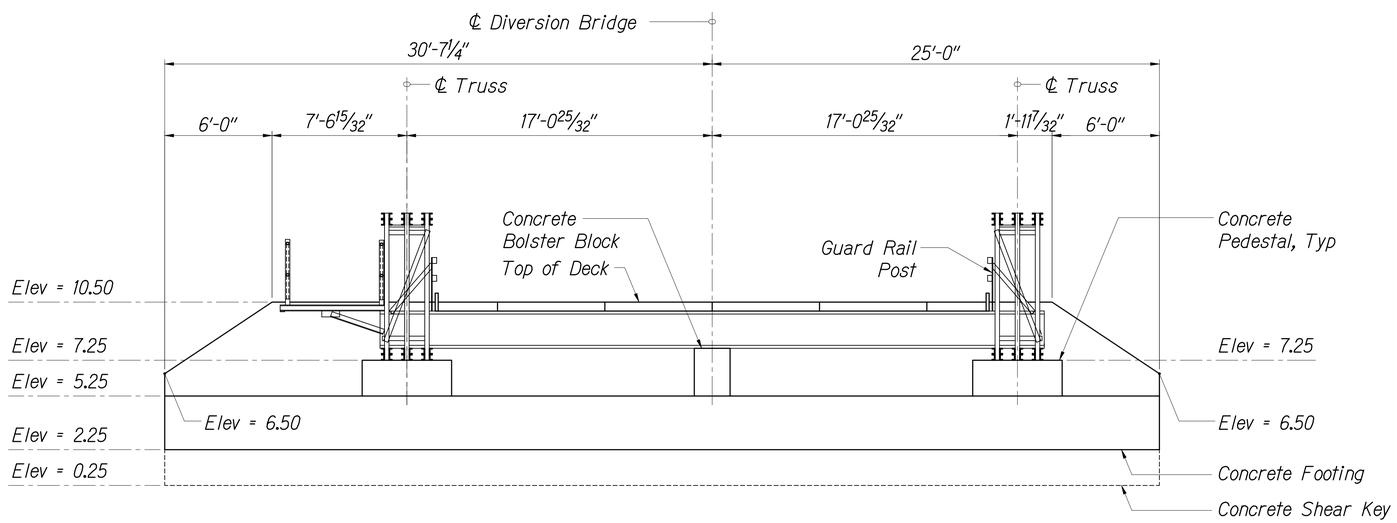

DIVERSION BRIDGE ABUTMENT NO. 2 ELEVATION (2 / S7.4 | S7.4)

Scale 1/4" = 1'-0"

ORIGINAL PLAN	SURVEY PLOTTED BY	DATE
	DRAWN BY	
	TRACED BY	
NOTE BOOK	DESIGNED BY	
	QUANTITIES BY	
No.	CHECKED BY	

PLOT DATE: September 19, 2023 @ 01:48:29 pm

LAST UPDATE: April 11, 2023 @ 12:28:50 am

PATH/FILENAME: P:\1751-1800\1754 Laieloa Stream Bridge - M&E Pacific\Drawings\Structural\AutoCAD_format\2023-03-15\1754_S7-2 -S7-4.dwg

JERRY S FUJITA
LICENSED PROFESSIONAL ENGINEER
No. 11573-S
HAWAII, U.S.A.

LICENSE EXPIRES 4/30/24

THIS WORK WAS PREPARED BY ME OR UNDER MY SUPERVISION

STATE OF HAWAII
DEPARTMENT OF TRANSPORTATION
HIGHWAYS DIVISION

DIVERSION BRIDGE ABUTMENT ELEVATIONS

KAMEHAMEHA HIGHWAY
Laieloa Stream Bridge Replacement
Federal-Aid Project No. BR-083-1(58)

Scale: As Noted Date: September 2023

SHEET No. S7.4 OF 129 SHEETS

1754 Laieloa Stream Bridge - M&E Pacific\Drawings\Structural\AutoCAD_format\2023-03-15\1754_S7-2 -S7-4.dwg, 9/19/2023 1:48:30 PM, tamanaha

FED. ROAD DIST. NO.	STATE	FED. AID PROJ. NO.	FISCAL YEAR	SHEET NO.	TOTAL SHEETS
HAWAII	HAW.	BR-083-1(58)	2023	77	129

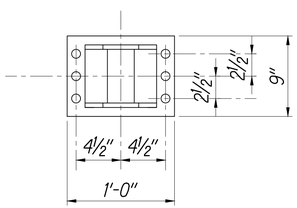

FIXED END BEARING DETAIL (1) S7.5 | S7.5

Not to Scale

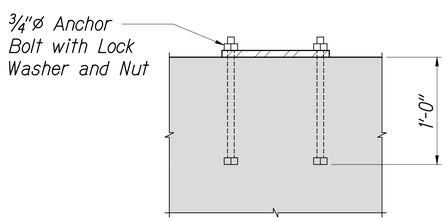

FIXED END BEARING DETAIL (2) S7.5 | S7.5

Not to Scale

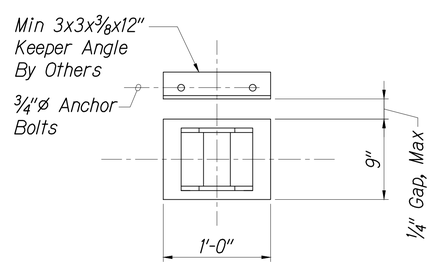

EXPANSION END BEARING DETAIL (3) S7.5 | S7.5

Not to Scale

ORIGINAL PLAN	SURVEY PLOTTED BY	DATE
	DRAWN BY	
	TRACED BY	
NOTE BOOK	DESIGNED BY	
	QUANTITIES BY	
No.	CHECKED BY	

PATH/FILENAME: P:\1751-1800\1754 Laieloa Stream Bridge - M&E Pacific\Drawings\Structural\AutoCAD_format\2023-03-15\1754_S7-5.dwg

LAST UPDATE: April 12, 2023 @ 06:48:50 pm

PLOT DATE: September 19, 2023 @ 01:48:34 pm

JERRY S FUJITA
LICENSED PROFESSIONAL ENGINEER
No. 11573-S
HAWAII, U.S.A.

LICENSE EXPIRES 4/30/24

THIS WORK WAS PREPARED BY ME OR UNDER MY SUPERVISION

STATE OF HAWAII
DEPARTMENT OF TRANSPORTATION
HIGHWAYS DIVISION

DIVERSION ROAD
BEARING DETAILS

KAMEHAMEHA HIGHWAY
Laieloa Stream Bridge Replacement
Federal-Aid Project No. BR-083-1(58)

Scale: As Noted Date: September 2023

SHEET No. S7.5 OF 129 SHEETS

1754 Laieloa Stream Bridge - M&E Pacific\Drawings\Structural\AutoCAD_format\2023-03-15\1754_S7-5.dwg, 9/19/2023 1:48:34 PM, tamanaha

FED. ROAD DIST. NO.	STATE	FED. AID PROJ. NO.	FISCAL YEAR	SHEET NO.	TOTAL SHEETS
HAWAII	HAW.	BR-083-1(58)	2023	78	129

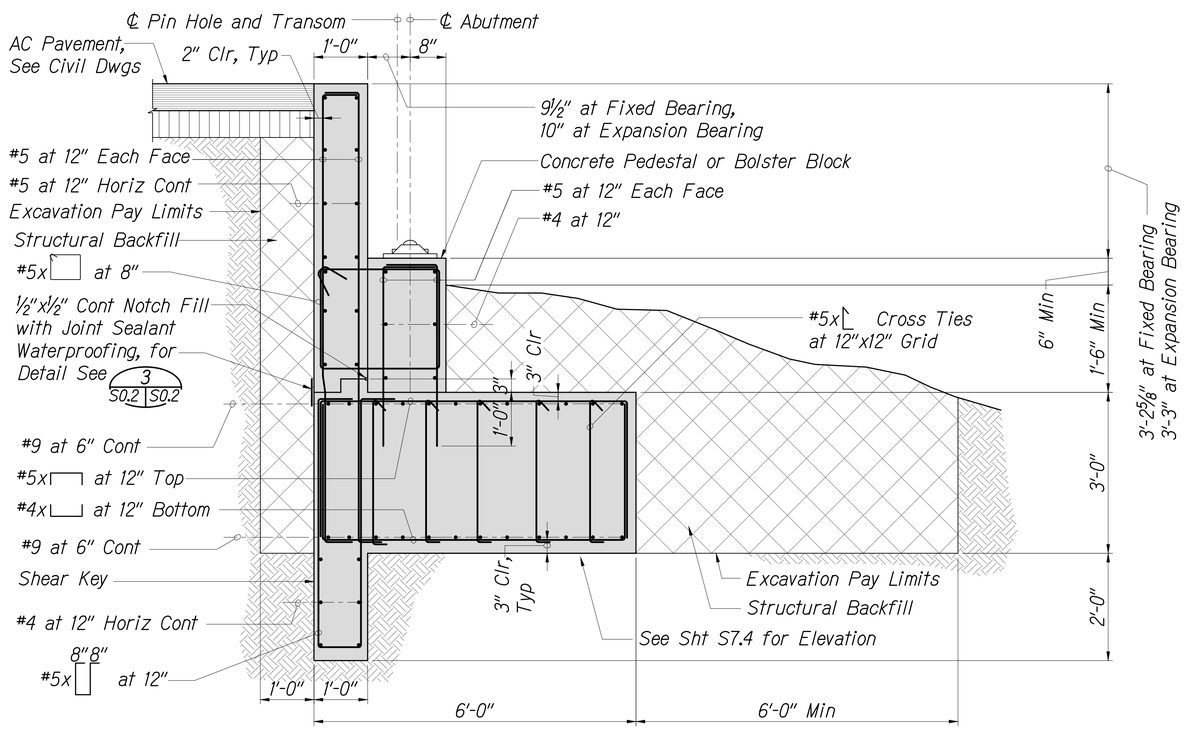

ABUTMENT SECTION 1 S7.6 S7.6

Scale: 3/4" = 1'-0"

ORIGINAL PLAN	SURVEY PLOTTED BY	DATE
	DRAWN BY	
FINAL	TRACED BY	
NOTE BOOK	DESIGNED BY	
	QUANTITIES BY	
No.	CHECKED BY	

PATH/FILENAME: P:\1751-1800\1754 Laieloa Stream Bridge - M&E Pacific\Drawings\Structural\AutoCAD_format\2023-03-15\1754_S7-6.dwg

PLOT DATE: September 19, 2023 @ 01:48:38 pm

LAST UPDATE: April 12, 2023 @ 06:48:57 pm

1754 Laieloa Stream Bridge - M&E Pacific\Drawings\Structural\AutoCAD_format\2023-03-15\1754_S7-6.dwg, 9/19/2023 1:48:37 PM, tamanaha

JERRY S FUJITA
LICENSED PROFESSIONAL ENGINEER
No. 11573-S
HAWAII, U.S.A.

LICENSE EXPIRES 4/30/24

THIS WORK WAS PREPARED BY ME OR UNDER MY SUPERVISION

STATE OF HAWAII
DEPARTMENT OF TRANSPORTATION
HIGHWAYS DIVISION

DIVERSION ROAD
FOUNDATION DETAILS

KAMEHAMEHA HIGHWAY
Laieloa Stream Bridge Replacement
Federal-Aid Project No. BR-083-1(58)

Scale: As Noted Date: September 2023

SHEET No. S7.6 OF 129 SHEETS

FED. ROAD DIST. NO.	STATE	FED. AID PROJ. NO.	FISCAL YEAR	SHEET NO.	TOTAL SHEETS
HAWAII	HAW.	BR-083-1(58)	2023	79	129

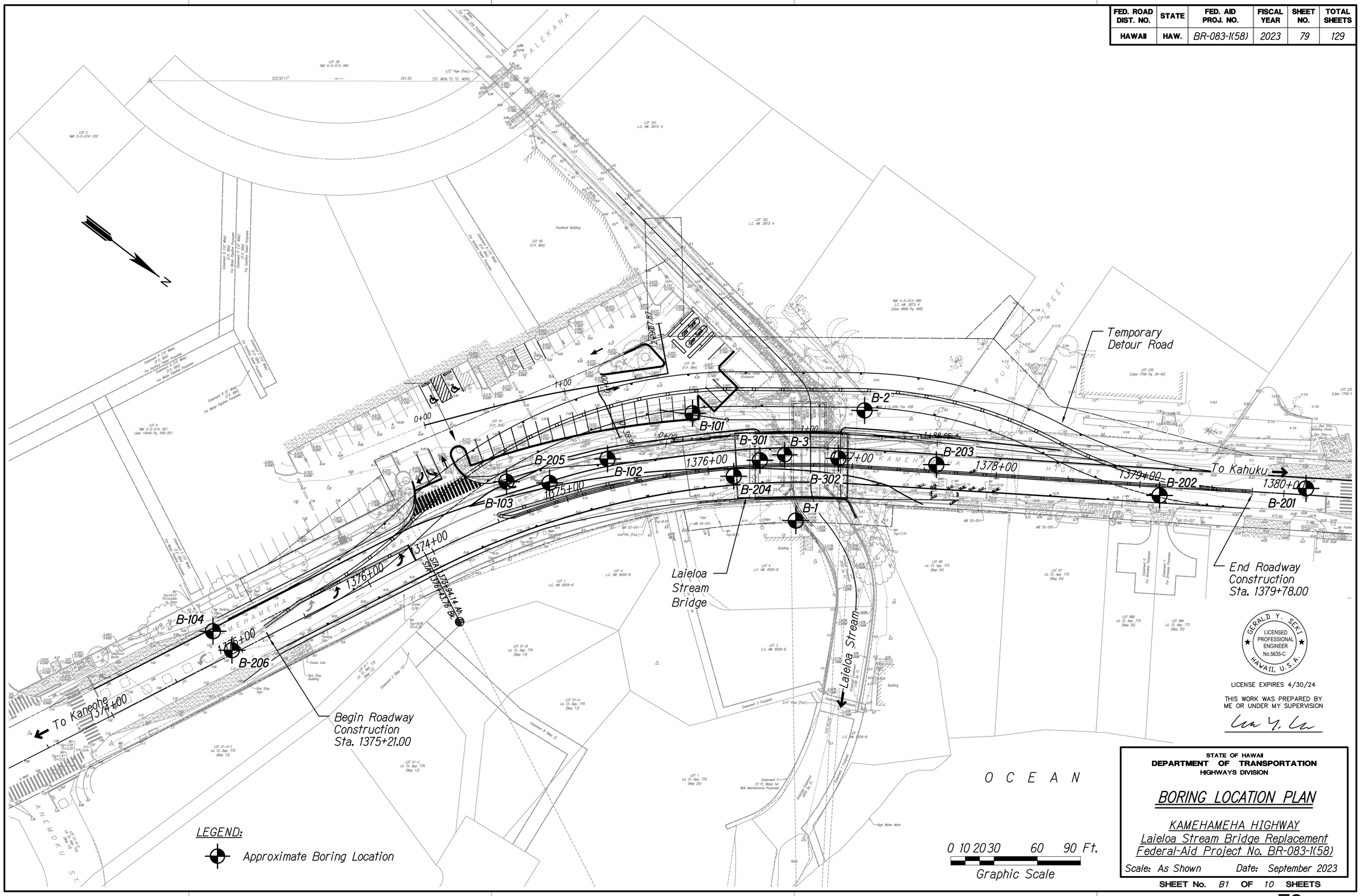

GERALD Y. SEKI
LICENSED PROFESSIONAL ENGINEER
No.5635-C
HAWAII, U.S.A.

LICENSE EXPIRES 4/30/24

THIS WORK WAS PREPARED BY ME OR UNDER MY SUPERVISION

STATE OF HAWAII
DEPARTMENT OF TRANSPORTATION
HIGHWAYS DIVISION

BORING LOCATION PLAN

KAMEHAMEHA HIGHWAY
Laieloa Stream Bridge Replacement
Federal-Aid Project No. BR-083-1(58)

Scale: As Shown Date: September 2023

SHEET No. B1 OF 10 SHEETS

ORIGINAL PLAN		DATE
	SURVEY PLOTTED BY	
	DRAWN BY	
	TRACED BY	
NOTE BOOK	DESIGNED BY	
	QUANTITIES BY	
No.	CHECKED BY	

FED. ROAD DIST. NO.	STATE	FED. AID PROJ. NO.	FISCAL YEAR	SHEET NO.	TOTAL SHEETS
HAWAII	HAW.	BR-083-1(58)	2023	80	129

GEOLABS, INC.
Geotechnical Engineering

Soil Log Legend

UNIFIED SOIL CLASSIFICATION SYSTEM (USCS)

MAJOR DIVISIONS			USCS	TYPICAL DESCRIPTIONS
COARSE-GRAINED SOILS MORE THAN 50% OF MATERIAL RETAINED ON NO. 200 SIEVE	GRAVELS MORE THAN 50% OF COARSE FRACTION RETAINED ON NO. 4 SIEVE	CLEAN GRAVELS LESS THAN 5% FINES	GW	WELL-GRADED GRAVELS, GRAVEL-SAND MIXTURES, LITTLE OR NO FINES
			GP	POORLY-GRADED GRAVELS, GRAVEL-SAND MIXTURES, LITTLE OR NO FINES
		GRAVELS WITH FINES MORE THAN 12% FINES	GM	SILTY GRAVELS, GRAVEL-SAND-SILT MIXTURES
			GC	CLAYEY GRAVELS, GRAVEL-SAND-CLAY MIXTURES
	SANDS 50% OR MORE OF COARSE FRACTION PASSING THROUGH NO. 4 SIEVE	CLEAN SANDS LESS THAN 5% FINES	SW	WELL-GRADED SANDS, GRAVELLY SANDS, LITTLE OR NO FINES
			SP	POORLY-GRADED SANDS, GRAVELLY SANDS, LITTLE OR NO FINES
		SANDS WITH FINES MORE THAN 12% FINES	SM	SILTY SANDS, SAND-SILT MIXTURES
			SC	CLAYEY SANDS, SAND-CLAY MIXTURES
FINE-GRAINED SOILS 50% OR MORE OF MATERIAL PASSING THROUGH NO. 200 SIEVE	SILTS AND CLAYS	LIQUID LIMIT LESS THAN 50	ML	INORGANIC SILTS AND VERY FINE SANDS, ROCK FLOUR, SILTY OR CLAYEY FINE SANDS OR CLAYEY SILTS WITH SLIGHT PLASTICITY
			CL	INORGANIC CLAYS OF LOW TO MEDIUM PLASTICITY, GRAVELLY CLAYS, SANDY CLAYS, SILTY CLAYS, LEAN CLAYS
			OL	ORGANIC SILTS AND ORGANIC SILTY CLAYS OF LOW PLASTICITY
	SILTS AND CLAYS	LIQUID LIMIT 50 OR MORE	MH	INORGANIC SILT, MICACEOUS OR DIATOMACEOUS FINE SAND OR SILTY SOILS
			CH	INORGANIC CLAYS OF HIGH PLASTICITY
			OH	ORGANIC CLAYS OF MEDIUM TO HIGH PLASTICITY, ORGANIC SILTS
HIGHLY ORGANIC SOILS			PT	PEAT, HUMUS, SWAMP SOILS WITH HIGH ORGANIC CONTENTS

NOTE: DUAL SYMBOLS ARE USED TO INDICATE BORDERLINE SOIL CLASSIFICATIONS

LEGEND

	(2-INCH) O.D. STANDARD PENETRATION TEST	LL	LIQUID LIMIT (NP=NON-PLASTIC)
	(3-INCH) O.D. MODIFIED CALIFORNIA SAMPLE	PI	PLASTICITY INDEX (NP=NON-PLASTIC)
S	SHELBY TUBE SAMPLE	TV	TORVANE SHEAR (tsf)
G	GRAB SAMPLE	PEN	POCKET PENETROMETER (tsf)
	CORE SAMPLE	UC	UNCONFINED COMPRESSION (psi)
	WATER LEVEL OBSERVED IN BORING	UU	UNCONSOLIDATED UNDRAINED TRIAXIAL COMPRESSION (ksf)

Plate A-0.1

LOG LEGEND FOR SOIL 6155-00&10.GPJ GEOLABS.GDT 2/2/12

GEOLABS, INC.
Geotechnical Engineering

Rock Log Legend

ROCK DESCRIPTIONS

	BASALT		FINGER CORAL
	BOULDERS		LIMESTONE
	BRECCIA		SANDSTONE
	CLINKER		SILTSTONE
	COBBLES		TUFF
	CORAL		VOID/CAVITY

ROCK DESCRIPTION SYSTEM

ROCK FRACTURE CHARACTERISTICS

The following terms describe general fracture spacing of a rock:

Massive:	Greater than 24 inches apart
Slightly Fractured:	12 to 24 inches apart
Moderately Fractured:	6 to 12 inches apart
Closely Fractured:	3 to 6 inches apart
Severely Fractured:	Less than 3 inches apart

DEGREE OF WEATHERING

The following terms describe the chemical weathering of a rock:

Unweathered:	Rock shows no sign of discoloration or loss of strength.
Slightly Weathered:	Slight discoloration inwards from open fractures.
Moderately Weathered:	Discoloration throughout and noticeably weakened though not able to break by hand.
Highly Weathered:	Most minerals decomposed with some corestones present in residual soil mass. Can be broken by hand.
Extremely Weathered:	Saprolite. Mineral residue completely decomposed to soil but fabric and structure preserved.

HARDNESS

The following terms describe the resistance of a rock to indentation or scratching:

Very Hard:	Specimen breaks with difficulty after several "pinging" hammer blows. Example: Dense, fine grain volcanic rock
Hard:	Specimen breaks with some difficulty after several hammer blows. Example: Vesicular, vugular, coarse-grained rock
Medium Hard:	Specimen can be broked by one hammer blow. Cannot be scraped by knife. SPT may penetrate by ~25 blows per inch with bounce. Example: Porous rock such as clinker, cinder, and coral reef
Soft:	Can be indented by one hammer blow. Can be scraped or peeled by knife. SPT can penetrate by ~100 blows per foot. Example: Weathered rock, chalk-like coral reef
Very Soft:	Crumbles under hammer blow. Can be peeled and carved by knife. Can be indented by finger pressure. Example: Saprolite

Plate A-0.2

LOG LEGEND FOR ROCK 6155-00&10.GPJ GEOLABS.GDT 2/2/12

GEOTECHNICAL NOTES

1. A geotechnical engineering report entitled "Geotechnical Engineering Exploration, Laieloa Stream Bridge Replacement, Laie, Oahu, Hawaii" dated September 27, 2021 has been prepared by Geolabs, Inc. A copy of the report is on file at the office of the Engineer for review by the Contractor.
2. For boring locations, see Sheet B1.
3. The information presented in the logs of borings depict the subsurface conditions encountered at that specified location and at the time of the field exploration only. Variations of subsoil conditions from those depicted in the logs of borings may occur between and beyond the borings.
4. The penetration resistance shown on the logs of borings indicate the number of blows required for the specific sampler type used. The blow counts may need to be factored to obtain the Standard Penetration Test (SPT) blow counts.
5. The data given is for general information only. Bidders shall examine the site and the boring data and draw their own conclusions therefrom as to the character of materials to be encountered. The Engineer will not assume responsibility for variations of subsoil quality or conditions other than at the boring locations shown and at the time the borings were taken.

GERALD Y. SEKI
LICENSED PROFESSIONAL ENGINEER
No.5635-C
HAWAII, U.S.A.

LICENSE EXPIRES 4/30/24

THIS WORK WAS PREPARED BY ME OR UNDER MY SUPERVISION

ORIGINAL PLAN
NOTE BOOK No.
SURVEY PLOTTED BY
DRAWN BY
TRACED BY
DESIGNED BY
QUANTITIES BY
CHECKED BY
DATE

STATE OF HAWAII
DEPARTMENT OF TRANSPORTATION
HIGHWAYS DIVISION

BORING LOG LEGEND & NOTES

KAMEHAMEHA HIGHWAY
Laieloa Stream Bridge Replacement
Federal-Aid Project No. BR-083-1(58)

Scale: As Shown Date: September 2023

SHEET No. B2 OF 10 SHEETS

FED. ROAD DIST. NO.	STATE	FED. AID PROJ. NO.	FISCAL YEAR	SHEET NO.	TOTAL SHEETS
HAWAII	HAW.	BR-083-1(58)	2023	81	129

GEOLABS, INC.
Geotechnical Engineering

LAIELOA STREAM BRIDGE REPLACEMENT
LAIE, OAHU, HAWAII

Log of Boring 1

Approximate Ground Surface Elevation (feet): 7.5 *

Other Tests	Moisture Content (%)	Dry Unit Weight (pcf)	Core Recovery (%)	RQD (%)	Penetration Resistance (blows/foot)	Pocket Pen. (tsf)	Depth (feet)	Sample	Graphic	USCS	Description
	25	70			20					ML	Brown SANDY SILT with some clay and gravel, stiff, damp (fill)
Sieve #200 = 9.3%	24				14					SP-SM	Light brown SAND (CORALLINE) with some gravel and traces of silt, medium dense, damp (fill)
	37	73			14	1.5	5			CH	Brown CLAY with sand, stiff, moist (fill)
											Tan CORAL, moderately weathered, hard
			53	31	15/1"		10				
UC=2350											
							15				
			3							GM	Brownish tan SANDY GRAVEL (CORALLINE) with clayey silt, medium dense to loose (coralline detritus)
							20				
	17				9						
			7				25				
	14				13					SW	Brown SAND (CORALLINE) with some gravel and a little silt, medium dense (coralline detritus)
			0				30				
Sieve #200 = 4.5%	16				24						
			0				35				
	21				10						
							40				Boring terminated at 38.5 feet
											* Elevations estimated from Topographic Survey Map transmitted by AECOM on January 7, 2010.
							45				
							50				
							55				
							60				
							65				
							70				
							75				

Date Started:	June 25, 2009	Water Level: ∇	8.9 ft. 06/25/2009 1148 HRS
Date Completed:	June 25, 2009		
Logged By:	D. Gremminger	Drill Rig:	CME-45
Total Depth:	38.5 feet	Drilling Method:	4" Auger & HQ Coring
Work Order:	6155-00&10(A)	Driving Energy:	140 lb. wt., 30 in. ds drop

BORING_LOG_DOT.CKF 6155-00&10.GPJ GEOLABS.GDT 3/19/21

GEOLABS, INC.
Geotechnical Engineering

LAIELOA STREAM BRIDGE REPLACEMENT
LAIE, OAHU, HAWAII

Log of Boring 2

Approximate Ground Surface Elevation (feet): 7.8 *

Other Tests	Moisture Content (%)	Dry Unit Weight (pcf)	Core Recovery (%)	RQD (%)	Penetration Resistance (blows/foot)	Pocket Pen. (tsf)	Depth (feet)	Sample	Graphic	USCS	Description
	18	88			25	2.5				MH	Brown CLAYEY SILT with sand and gravel, very stiff, moist (fill)
	12				10						
Sieve #200 = 4.3%	14	77			18		5			SP	Orangish brown SAND (CORALLINE) with a little gravel and traces of silt, medium dense, moist (beach sand)
	24				29		10			GM	Tan SANDY GRAVEL (CORALLINE) with clayey silt, medium dense (coralline detritus)
	17				10		15				
			45	15							Tan CORAL, moderately weathered, hard
							20				
			14	0	15/1"						grades to interbedded with clayey silt pockets
							25				
	12				6					GW-GM	Brown GRAVEL (CORALLINE) with some sand and few silt, loose (coralline detritus)
			17				30				
Sieve #200 = 5.8%	21				7						
			10				35				
	23				9						
							40				Boring terminated at 38.5 feet
							45				
							50				
							55				
							60				
							65				
							70				
							75				

Date Started:	June 23, 2009	Water Level: ∇	8.4 ft. 06/23/2009 1458 HRS
Date Completed:	June 23, 2009		
Logged By:	D. Gremminger	Drill Rig:	CME-45
Total Depth:	38.5 feet	Drilling Method:	4" Auger & HQ Coring
Work Order:	6155-00&10(A)	Driving Energy:	140 lb. wt., 30 in. ds drop

BORING_LOG_DOT.CKF 6155-00&10.GPJ GEOLABS.GDT 3/19/21

ORIGINAL PLAN
NOTE BOOK No.
SURVEY PLOTTED BY
DRAWN BY
TRACED BY
DESIGNED BY
QUANTITIES BY
CHECKED BY
DATE

GERALD Y. SEKI
LICENSED PROFESSIONAL ENGINEER No.5635-C
HAWAII, U.S.A.

LICENSE EXPIRES 4/30/24

THIS WORK WAS PREPARED BY ME OR UNDER MY SUPERVISION

STATE OF HAWAII
DEPARTMENT OF TRANSPORTATION
HIGHWAYS DIVISION

BORING LOGS – 1

KAMEHAMEHA HIGHWAY
Laieloa Stream Bridge Replacement
Federal-Aid Project No. BR-083-1(58)

Scale: As Shown Date: September 2023

SHEET No. B3 OF 10 SHEETS

FED. ROAD DIST. NO.	STATE	FED. AID PROJ. NO.	FISCAL YEAR	SHEET NO.	TOTAL SHEETS
HAWAII	HAW.	BR-083-1(58)	2023	82	129

GEOLABS, INC.
Geotechnical Engineering

LAIELOA STREAM BRIDGE REPLACEMENT
LAIE, OAHU, HAWAII

Log of Boring 3

Approximate Ground Surface Elevation (feet): 10.5 *

Other Tests	Moisture Content (%)	Dry Unit Weight (pcf)	Core Recovery (%)	RQD (%)	Penetration Resistance (blows/foot)	Pocket Pen. (tsf)	Depth (feet)	Sample	Graphic	USCS	Description
	46	66			14	2.5				MH	5-inch ASPHALTIC CONCRETE
	46				10					SM	Brown CLAYEY SILT with sand, gravel, and some cobbles, stiff, moist (fill)
	9	70			13		5				Light brown SILTY SAND (CORALLINE) with gravel, loose, moist (fill)
	22				52		10			SM	Brownish tan SILTY SAND (CORALLINE) with gravel, very dense (lagoonal deposit)
UC=1050			0	0							Brownish tan CORAL, moderately weathered, hard
			100	38			15				
			85	40			20				
			100	85			25				
			17	13			30				
	11				20					GP-GM	Brown GRAVEL (CORALLINE) with a little sand and silt, medium dense (coralline detritus)
			24				35				
Sieve #200 = 9.6%	22				12						
							40				Boring terminated at 38.5 feet
							45				
							50				
							55				
							60				
							65				
							70				
							75				

Date Started:	June 24, 2009	Water Level: ∇	8.5 ft. 06/24/2009 1444 HRS
Date Completed:	June 24, 2009		
Logged By:	D. Gremminger	Drill Rig:	CME-45
Total Depth:	38.5 feet	Drilling Method:	4" Auger & HQ Coring
Work Order:	6155-00&10(A)	Driving Energy:	140 lb. wt., 30 in. drop

BORING_LOG_DOT.DGF 6155-00&10.GPJ GEOLABS.GDT 3/19/21

GEOLABS, INC.
Geotechnical Engineering

LAIELOA STREAM BRIDGE REPLACEMENT
LAIE, OAHU, HAWAII

Log of Boring 101

Approximate Ground Surface Elevation (feet): 6.5 *

Other Tests	Moisture Content (%)	Dry Unit Weight (pcf)	Core Recovery (%)	RQD (%)	Penetration Resistance (blows/foot)	Pocket Pen. (tsf)	Depth (feet)	Sample	Graphic	USCS	Description
	11	107			21	1.0				MH	4-inch ASPHALTIC CONCRETE
	15				5	1.0					Tannish brown CLAYEY SILT with sand and gravel, stiff, moist (fill)
LL=NP PI=NP Sieve #200 = 18.2%	35	76			3		5			SM	grades to medium stiff Brown SILTY SAND (CORALLINE) with a little gravel, very loose, wet (lagoonal deposit)
	14				44		10			GM	Tan SILTY GRAVEL (CORALLINE) with sand, dense (coralline detritus)
			75				15				
	11				37						
			29				20				
	18				8						grades to loose
							25				Boring terminated at 23.5 feet
							30				

Date Started:	June 23, 2009	Water Level: ∇	6.5 ft. 06/23/2009 1238 HRS
Date Completed:	June 23, 2009		
Logged By:	D. Gremminger	Drill Rig:	CME-45
Total Depth:	23.5 feet	Drilling Method:	4" Auger & HQ Coring
Work Order:	6155-00&10(A)	Driving Energy:	140 lb. wt., 30 in. drop

BORING_LOG_DOT.DGF 6155-00&10.GPJ GEOLABS.GDT 3/19/21

GEOLABS, INC.
Geotechnical Engineering

LAIELOA STREAM BRIDGE REPLACEMENT
LAIE, OAHU, HAWAII

Log of Boring 102

Approximate Ground Surface Elevation (feet): 10 *

Other Tests	Moisture Content (%)	Dry Unit Weight (pcf)	Core Recovery (%)	RQD (%)	Penetration Resistance (blows/foot)	Pocket Pen. (tsf)	Depth (feet)	Sample	Graphic	USCS	Description
	12	96			5	0.5					12-inch ASPHALTIC CONCRETE
	38				9					CH	Brown CLAY with sand and gravel, soft, moist (fill)
LL=54 PI=30 Direct Shear UC=1.4 ksf	25	82			12	1.0	5				grades to medium stiff
	30				8		10			SM	Tan SILTY SAND (CORALLINE) with gravel, loose, saturated (lagoonal deposit)
	16				31/4"		15			GM	Tan SILTY GRAVEL (CORALLINE) with sand, very dense (coralline detritus)
			100	0							Tan CORAL, moderately weathered, hard
			53	35			20				
			0								
	9				15/1"		25				Boring terminated at 25.6 feet
							30				

Date Started:	June 22, 2009	Water Level: ∇	10.5 ft. 06/22/2009 1155 HRS
Date Completed:	June 22, 2009		
Logged By:	D. Gremminger	Drill Rig:	CME-45
Total Depth:	25.6 feet	Drilling Method:	4" Auger & HQ Coring
Work Order:	6155-00&10(A)	Driving Energy:	140 lb. wt., 30 in. drop

BORING_LOG_DOT.DGF 6155-00&10.GPJ GEOLABS.GDT 3/19/21

GERALD Y. SEKI
LICENSED PROFESSIONAL ENGINEER No.5635-C
HAWAII, U.S.A.

LICENSE EXPIRES 4/30/24

THIS WORK WAS PREPARED BY ME OR UNDER MY SUPERVISION

STATE OF HAWAII
DEPARTMENT OF TRANSPORTATION
HIGHWAYS DIVISION

BORING LOGS – 2

KAMEHAMEHA HIGHWAY
Laieloa Stream Bridge Replacement
Federal-Aid Project No. BR-083-1(58)

Scale: As Shown Date: September 2023

SHEET No. B4 OF 10 SHEETS

ORIGINAL PLAN
NOTE BOOK No.
SURVEY PLOTTED BY
DRAWN BY
TRACED BY
DESIGNED BY
QUANTITIES BY
CHECKED BY
DATE

FED. ROAD DIST. NO.	STATE	FED. AID PROJ. NO.	FISCAL YEAR	SHEET NO.	TOTAL SHEETS
HAWAII	HAW.	BR-083-1(58)	2023	83	129

GEOLABS, INC.
Geotechnical Engineering

LAIELOA STREAM BRIDGE REPLACEMENT
LAIE, OAHU, HAWAII

Log of Boring 103

Approximate Ground Surface Elevation (feet): 9.5 *

Other Tests	Moisture Content (%)	Dry Unit Weight (pcf)	Core Recovery (%)	RQD (%)	Penetration Resistance (blows/foot)	Pocket Pen. (tsf)	Depth (feet)	Sample	Graphic	USCS	Description
											8-inch ASPHALTIC CONCRETE
	8	107			11	1.0				GM	Gray SILTY GRAVEL with sand, medium dense, dry (fill)
	33				6	0.5				CH	Brown CLAY with sand and gravel, medium stiff, moist (fill)
	20	94			12	1.0	5				
	18		77	36	15/1"		10			GM	Tan SILTY GRAVEL (CORALLINE) with sand, very dense (coralline detritus)
			0								Tan CORAL, moderately weathered, hard
	11		69	44	14/6" +23/3"		15				
			55	28			20				
							25				Boring terminated at 27 feet
							30				

Date Started:	June 22, 2009	Water Level: ∇	8.5 ft. 06/22/2009 1448 HRS
Date Completed:	June 22, 2009		
Logged By:	D. Gremminger	Drill Rig:	CME-45
Total Depth:	27 feet	Drilling Method:	4" Auger & HQ Coring
Work Order:	6155-00&10(A)	Driving Energy:	140 lb. wt., 30 in. drop

BORING_LOG_DOT_HALF.DWF 6155-00&10.GPJ GEOLABS.GDT 3/19/21

GEOLABS, INC.
Geotechnical Engineering

LAIELOA STREAM BRIDGE REPLACEMENT
LAIE, OAHU, HAWAII

Log of Boring 201

Approximate Ground Surface Elevation (feet): 11 *

Other Tests	Moisture Content (%)	Dry Unit Weight (pcf)	Core Recovery (%)	RQD (%)	Penetration Resistance (blows/foot)	Pocket Pen. (tsf)	Depth (feet)	Sample	Graphic	USCS	Description
											6-inch ASPHALTIC CONCRETE
LL=81	42	71			16	2.5				CH	Gray, brown, and black CLAY with sand, gravel, and some cobbles, stiff, moist (fill)
PI=49	49				6	1.0					grades to medium stiff
	20	65			12		5			SP	Brownish tan SAND (CORALLINE) with gravel, loose, moist (beach sand)
											Boring terminated at 6.5 feet
							10				
							15				
							20				
							25				
							30				

Date Started:	June 24, 2009	Water Level: ∇	Not Encountered
Date Completed:	June 24, 2009		
Logged By:	D. Gremminger	Drill Rig:	CME-45
Total Depth:	6.5 feet	Drilling Method:	4" Auger
Work Order:	6155-00&10(A)	Driving Energy:	140 lb. wt., 30 in. drop

BORING_LOG_DOT_HALF.DWF 6155-00&10.GPJ GEOLABS.GDT 3/19/21

GEOLABS, INC.
Geotechnical Engineering

LAIELOA STREAM BRIDGE REPLACEMENT
LAIE, OAHU, HAWAII

Log of Boring 104

Approximate Ground Surface Elevation (feet): 7 *

Other Tests	Moisture Content (%)	Dry Unit Weight (pcf)	Core Recovery (%)	RQD (%)	Penetration Resistance (blows/foot)	Pocket Pen. (tsf)	Depth (feet)	Sample	Graphic	USCS	Description
											10-inch ASPHALTIC CONCRETE
	24	93			9	1.0				CH	Brown CLAY with sand and gravel, medium stiff, moist (fill)
	23				8	1.0					
	15	81			6		5			SP	Brownish tan SAND (CORALLINE) with some fine gravel, loose, moist (beach sand)
	29				10		10				grades to medium dense, saturated
Sieve - #200 = 19.8%	31				9		15			SM	Brownish tan SILTY SAND (CORALLINE) with a little gravel, loose (lagoonal deposit)
	35				6		20				
	34				1		25				grades to very loose
											Boring terminated at 26.5 feet
							30				

Date Started:	June 23, 2009	Water Level: ∇	9.5 ft. 06/23/2009 1031 HRS
Date Completed:	June 23, 2009		
Logged By:	D. Gremminger	Drill Rig:	CME-45
Total Depth:	26.5 feet	Drilling Method:	4" Auger
Work Order:	6155-00&10(A)	Driving Energy:	140 lb. wt., 30 in. drop

BORING_LOG_DOT_HALF.DWF 6155-00&10.GPJ GEOLABS.GDT 3/19/21

GEOLABS, INC.
Geotechnical Engineering

LAIELOA STREAM BRIDGE REPLACEMENT
LAIE, OAHU, HAWAII

Log of Boring 202

Approximate Ground Surface Elevation (feet): 10.5 *

Other Tests	Moisture Content (%)	Dry Unit Weight (pcf)	Core Recovery (%)	RQD (%)	Penetration Resistance (blows/foot)	Pocket Pen. (tsf)	Depth (feet)	Sample	Graphic	USCS	Description
											6-inch ASPHALTIC CONCRETE
	46	71			17	1.5				CH	Brown CLAY with sand and gravel, stiff, moist (fill)
	16				15					SM	Black SILTY SAND with some gravel, medium dense, moist (fill)
	23	56			12		5			SP	Tan SAND (CORALLINE), medium dense, moist (beach sand)
											Boring terminated at 6.5 feet
							10				
							15				
							20				
							25				
							30				

Date Started:	June 24, 2009	Water Level: ∇	Not Encountered
Date Completed:	June 24, 2009		
Logged By:	D. Gremminger	Drill Rig:	CME-45
Total Depth:	6.5 feet	Drilling Method:	4" Auger
Work Order:	6155-00&10(A)	Driving Energy:	140 lb. wt., 30 in. drop

BORING_LOG_DOT_HALF.DWF 6155-00&10.GPJ GEOLABS.GDT 3/19/21

ORIGINAL PLAN	SURVEY PLOTTED BY	DATE
	DRAWN BY	
	TRACED BY	
	DESIGNED BY	
NOTE BOOK	QUANTITIES BY	
No.	CHECKED BY	

GERALD Y. SEKI
LICENSED PROFESSIONAL ENGINEER No.5635-C
HAWAII, U.S.A.

LICENSE EXPIRES 4/30/24

THIS WORK WAS PREPARED BY ME OR UNDER MY SUPERVISION

STATE OF HAWAII
DEPARTMENT OF TRANSPORTATION
HIGHWAYS DIVISION

BORING LOGS – 3

KAMEHAMEHA HIGHWAY
Laieloa Stream Bridge Replacement
Federal-Aid Project No. BR-083-1(58)

Scale: As Shown Date: September 2023

SHEET No. B5 OF 10 SHEETS

FED. ROAD DIST. NO.	STATE	FED. AID PROJ. NO.	FISCAL YEAR	SHEET NO.	TOTAL SHEETS
HAWAII	HAW.	BR-083-1(58)	2023	84	129

GEOLABS, INC.
Geotechnical Engineering

LAIELOA STREAM BRIDGE REPLACEMENT
LAIE, OAHU, HAWAII

Log of Boring 203

Approximate Ground Surface Elevation (feet): 10.5 *

Other Tests	Moisture Content (%)	Dry Unit Weight (pcf)	Core Recovery (%)	RQD (%)	Penetration Resistance (blows/foot)	Pocket Pen. (tsf)	Depth (feet)	Sample	Graphic	USCS	Description
											6-inch ASPHALTIC CONCRETE
	36	78			17	3.0				CH	Brown CLAY with sand, gravel, and some cobbles, stiff, moist (fill)
Sieve #200 = 16.2%	13				15					SM	Brown SILTY SAND with a little gravel, medium dense, moist (fill)
	18	75			13		5			SP	Tan SAND (CORALLINE), medium dense, moist (beach sand)
							10				Boring terminated at 6.5 feet
							15				
							20				
							25				
							30				

Date Started:	June 24, 2009	Water Level: ∇	Not Encountered
Date Completed:	June 24, 2009		
Logged By:	D. Gremminger	Drill Rig:	CME-45
Total Depth:	6.5 feet	Drilling Method:	4" Auger
Work Order:	6155-00&10(A)	Driving Energy:	140 lb. wt., 30 in. drop

GEOLABS, INC.
Geotechnical Engineering

LAIELOA STREAM BRIDGE REPLACEMENT
LAIE, OAHU, HAWAII

Log of Boring 204

Approximate Ground Surface Elevation (feet): 10 *

Other Tests	Moisture Content (%)	Dry Unit Weight (pcf)	Core Recovery (%)	RQD (%)	Penetration Resistance (blows/foot)	Pocket Pen. (tsf)	Depth (feet)	Sample	Graphic	USCS	Description
											7-inch ASPHALTIC CONCRETE
	17	80			16/6"	3.5				CH	Brown CLAY with sand and gravel, very stiff, moist (fill)
	7				+25/2"					SM	Brownish tan SILTY SAND (CORALLINE) with gravel, loose to medium dense, moist (fill)
					10		5				
	14	97			51						Boring terminated at 6.5 feet
							10				
							15				
							20				
							25				
							30				

Date Started:	June 24, 2009	Water Level: ∇	Not Encountered
Date Completed:	June 24, 2009		
Logged By:	D. Gremminger	Drill Rig:	CME-45
Total Depth:	6.5 feet	Drilling Method:	4" Auger
Work Order:	6155-00&10(A)	Driving Energy:	140 lb. wt., 30 in. drop

GEOLABS, INC.
Geotechnical Engineering

LAIELOA STREAM BRIDGE REPLACEMENT
LAIE, OAHU, HAWAII

Log of Boring 205

Approximate Ground Surface Elevation (feet): 10 *

Other Tests	Moisture Content (%)	Dry Unit Weight (pcf)	Core Recovery (%)	RQD (%)	Penetration Resistance (blows/foot)	Pocket Pen. (tsf)	Depth (feet)	Sample	Graphic	USCS	Description
										CH	5-inch ASPHALTIC CONCRETE
LL=55	17	92			13	2.0					Brown CLAY with sand and some gravel, stiff, moist (fill)
PI=32	20				18						grades to very stiff
Direct Shear	15	73			70		5			GM	Tan SILTY GRAVEL (CORALLINE) with sand, dense, moist (fill)
							10				Boring terminated at 6.5 feet
							15				
							20				
							25				
							30				

Date Started:	June 24, 2009	Water Level: ∇	Not Encountered
Date Completed:	June 24, 2009		
Logged By:	D. Gremminger	Drill Rig:	CME-45
Total Depth:	6.5 feet	Drilling Method:	4" Auger
Work Order:	6155-00&10(A)	Driving Energy:	140 lb. wt., 30 in. drop

GEOLABS, INC.
Geotechnical Engineering

LAIELOA STREAM BRIDGE REPLACEMENT
LAIE, OAHU, HAWAII

Log of Boring 206

Approximate Ground Surface Elevation (feet): 7.8 *

Other Tests	Moisture Content (%)	Dry Unit Weight (pcf)	Core Recovery (%)	RQD (%)	Penetration Resistance (blows/foot)	Pocket Pen. (tsf)	Depth (feet)	Sample	Graphic	USCS	Description
										CH	5-inch ASPHALTIC CONCRETE
	38	77			15	2.0					Brown CLAY with sand, gravel, and some cobbles, stiff, moist (fill)
	48				13	1.5					
	27	85			13		5			SP	Tan SAND (CORALLINE), medium dense, moist (beach sand)
											Boring terminated at 6.5 feet
							10				
							15				
							20				
							25				
							30				

Date Started:	June 24, 2009	Water Level: ∇	Not Encountered
Date Completed:	June 24, 2009		
Logged By:	D. Gremminger	Drill Rig:	CME-45
Total Depth:	6.5 feet	Drilling Method:	4" Auger
Work Order:	6155-00&10(A)	Driving Energy:	140 lb. wt., 30 in. drop

GERALD Y. SEKI
LICENSED PROFESSIONAL ENGINEER No.5635-C
HAWAII, U.S.A.

LICENSE EXPIRES 4/30/24

THIS WORK WAS PREPARED BY ME OR UNDER MY SUPERVISION

STATE OF HAWAII
DEPARTMENT OF TRANSPORTATION
HIGHWAYS DIVISION

BORING LOGS – 4

KAMEHAMEHA HIGHWAY
Laieloa Stream Bridge Replacement
Federal-Aid Project No. BR-083-1(58)

Scale: As Shown *Date: September 2023*

SHEET No. *B6* **OF** *10* **SHEETS**

ORIGINAL PLAN | SURVEY PLOTTED BY | DRAWN BY | TRACED BY | DESIGNED BY | NOTE BOOK | QUANTITIES BY | CHECKED BY | DATE | No.

FED. ROAD DIST. NO.	STATE	FED. AID PROJ. NO.	FISCAL YEAR	SHEET NO.	TOTAL SHEETS
HAWAII	HAW.	BR-083-1(58)	2023	85	129

GEOLABS, INC.
Geotechnical Engineering

LAIELOA STREAM BRIDGE REPLACEMENT
LAIE, OAHU, HAWAII

Log of Boring 301

Approximate Ground Surface Elevation (feet): 10.5 *

Other Tests	Moisture Content (%)	Dry Unit Weight (pcf)	Core Recovery (%)	RQD (%)	Penetration Resistance (blows/foot)	Pocket Pen. (tsf)	Depth (feet)	USCS	Description
	49	65			17	1.5		GW	5-inch ASPHALTIC CONCRETE
Sieve - #200 = 5.1% Direct Shear	9				9			CH	Grayish brown SANDY GRAVEL (BASALTIC), medium dense, dry (fill)
	12	95			9		5	SP-SM	Brown CLAY, stiff, moist (fill)
								GW	Tan SAND (CORALLINE) with a little gravel and silt, loose, damp (fill)
	31				16		10		Tan SANDY GRAVEL (CORALLINE), medium dense, very moist (coralline detritus)
UC=1440			98	98	25/2"		15		Tan CORAL, closely to slightly fractured, moderately weathered, medium hard to hard
UC=1380			68	63					
							20		
UC=1430			100	93					
							25		
UC=940			40	13					grades to severely to closely fractured
							30		
UC=1480			17					GP-GM	Brownish tan GRAVEL (CORALLINE) with some sand and a little silt, medium dense (coralline detritus)
							35		
Sieve - #200 = 6.5%	16		0		24				
							40		
	10		19		27				
							45		
	18		0		6			SM	Tannish brown GRAVELLY SAND (CORALLINE) with clayey silt, loose (coralline detritus)
							50		
	14		57	31	12				grades to medium dense
							55		Tan calcareous SANDSTONE, severely to moderately fractured, moderately weathered, medium hard (coralline sandstone)
			52	36	44		60	SM	Tannish brown SILTY SAND (CORALLINE) with some clay and some gravel, medium dense (weathered sandstone)
	20		62	29	10				
							65		
	24		25	0	13/6" +20/4"				grades to very dense
							70		
	26		38	0	23				grades to medium dense
							75		

Date Started:	September 20, 2010	Water Level: ∇	10.1 ft. 09/21/2010 0921 HRS
Date Completed:	September 21, 2010		
Logged By:	D. Gremminger	Drill Rig:	CME-75
Total Depth:	78.5 feet	Drilling Method:	4" Auger & HQ Coring
Work Order:	6155-00&10(A)	Driving Energy:	140 lb. wt., 30 in. drop

BORING LOG DOT.GDF 6155-00&10.GPJ GEOLABS.GDT 3/19/21

GEOLABS, INC.
Geotechnical Engineering

LAIELOA STREAM BRIDGE REPLACEMENT
LAIE, OAHU, HAWAII

Log of Boring 301

(Continued from previous plate)

Other Tests	Moisture Content (%)	Dry Unit Weight (pcf)	Core Recovery (%)	RQD (%)	Penetration Resistance (blows/foot)	Pocket Pen. (tsf)	Depth (feet)	USCS	Description
	49				18			SM	Tannish brown CLAYEY SAND (CORALLINE) with silt and some gravel, medium dense
							80		Boring terminated at 78.5 feet
							85		
							90		
							95		
							100		
							105		
							110		
							115		
							120		
							125		
							130		
							135		
							140		
							145		
							150		

Date Started:	September 20, 2010	Water Level: ∇	10.1 ft. 09/21/2010 0921 HRS
Date Completed:	September 21, 2010		
Logged By:	D. Gremminger	Drill Rig:	CME-75
Total Depth:	78.5 feet	Drilling Method:	4" Auger & HQ Coring
Work Order:	6155-00&10(A)	Driving Energy:	140 lb. wt., 30 in. drop

BORING LOG DOT.GDF 6155-00&10.GPJ GEOLABS.GDT 3/19/21

ORIGINAL PLAN
NOTE BOOK No.
SURVEY PLOTTED BY
DRAWN BY
TRACED BY
DESIGNED BY
QUANTITIES BY
CHECKED BY
DATE

GERALD Y. SEKI
LICENSED PROFESSIONAL ENGINEER No.5635-C
HAWAII, U.S.A.

LICENSE EXPIRES 4/30/24

THIS WORK WAS PREPARED BY ME OR UNDER MY SUPERVISION

STATE OF HAWAII
DEPARTMENT OF TRANSPORTATION
HIGHWAYS DIVISION

BORING LOGS – 5

KAMEHAMEHA HIGHWAY
Laieloa Stream Bridge Replacement
Federal-Aid Project No. BR-083-1(58)

Scale: As Shown Date: September 2023

SHEET No. B7 OF 10 SHEETS

FED. ROAD DIST. NO.	STATE	FED. AID PROJ. NO.	FISCAL YEAR	SHEET NO.	TOTAL SHEETS
HAWAII	HAW.	BR-083-1(58)	2023	86	129

GEOLABS, INC.
Geotechnical Engineering

LAIELOA STREAM BRIDGE REPLACEMENT
LAIE, OAHU, HAWAII

Log of Boring 302

Approximate Ground Surface Elevation (feet): 10.7 *

Other Tests	Moisture Content (%)	Dry Unit Weight (pcf)	Core Recovery (%)	RQD (%)	Penetration Resistance (blows/foot)	Pocket Pen. (tsf)	Depth (feet)	Sample	Graphic	USCS	Description
										GW	5-inch ASPHALTIC CONCRETE
UC=3.4 ksf	46				17 / 5	2.5 / 0.5				CH	Brownish gray SANDY GRAVEL (BASALTIC), medium dense, dry (fill)
LL=109 PI=72 Direct Shear	52				9	1.0	5				Brown CLAY with some sand, stiff, moist (fill) grades to medium stiff
Sieve - #200 = 7.5%	33		13		6		10			SP-SM	Tan SAND (CORALLINE) with some gravel and a little silt, loose, saturated (beach deposit)
			100	38	35/3"		15				Brownish tan CORAL, severely to moderately fractured, moderately weathered, medium hard
UC=1370			40	7			20				
	11		14		22		25			GW	Tan SANDY GRAVEL (CORALLINE) with some silt, medium dense (coralline detritus)
	14		0		24		30				
	9		0		8		35				grades to loose with cobbles
			12		13		40				grades to medium dense
	15		0		10		45				grades with brown clayey silt
	17		71	24	12		50				
			73	25			55				Tan CALCAREOUS SANDSTONE, severely to closely fractured, moderately weathered, hard (coralline sandstone)
			82	53			60				grades to highly weathered
UC=3540			37	22			65				
	19		31	0	10/1"		70			GW	
							75				

Date Started:	September 23, 2010	Water Level: ∇	10.5 ft. 09/23/2010 0926 HRS
Date Completed:	September 23, 2010		
Logged By:	D. Gremminger	Drill Rig:	CME-75
Total Depth:	78 feet	Drilling Method:	4" Auger & HQ Coring
Work Order:	6155-00&10(A)	Driving Energy:	140 lb. wt., 30 in. drop

BORING_LOG_DOT.DGN 6155-00&10.GPJ GEOLABS.GDT 3/19/21

GEOLABS, INC.
Geotechnical Engineering

LAIELOA STREAM BRIDGE REPLACEMENT
LAIE, OAHU, HAWAII

Log of Boring 302

(Continued from previous plate)

Other Tests	Moisture Content (%)	Dry Unit Weight (pcf)	Core Recovery (%)	RQD (%)	Penetration Resistance (blows/foot)	Pocket Pen. (tsf)	Depth (feet)	Sample	Graphic	USCS	Description
	12				65					GW	Whitish tan SANDY GRAVEL (CORALLINE) with cobbles and boulders, very dense (coralline detritus)
							80				Boring terminated at 78 feet
							85				
							90				
							95				
							100				
							105				
							110				
							115				
							120				
							125				
							130				
							135				
							140				
							145				
							150				

Date Started:	September 23, 2010	Water Level: ∇	10.5 ft. 09/23/2010 0926 HRS
Date Completed:	September 23, 2010		
Logged By:	D. Gremminger	Drill Rig:	CME-75
Total Depth:	78 feet	Drilling Method:	4" Auger & HQ Coring
Work Order:	6155-00&10(A)	Driving Energy:	140 lb. wt., 30 in. drop

BORING_LOG_DOT.DGN 6155-00&10.GPJ GEOLABS.GDT 3/19/21

ORIGINAL PLAN | SURVEY PLOTTED BY | DRAWN BY | TRACED BY | DESIGNED BY | QUANTITIES BY | CHECKED BY | DATE | NOTE BOOK | No.

GERALD Y. SEKI
LICENSED PROFESSIONAL ENGINEER No.5635-C
HAWAII, U.S.A.

LICENSE EXPIRES 4/30/24

THIS WORK WAS PREPARED BY ME OR UNDER MY SUPERVISION

STATE OF HAWAII
DEPARTMENT OF TRANSPORTATION
HIGHWAYS DIVISION

BORING LOGS – 6

KAMEHAMEHA HIGHWAY
Laieloa Stream Bridge Replacement
Federal-Aid Project No. BR-083-1(58)

Scale: As Shown Date: September 2023

SHEET No. B8 OF 10 SHEETS

FED. ROAD DIST. NO.	STATE	FED. AID PROJ. NO.	FISCAL YEAR	SHEET NO.	TOTAL SHEETS
HAWAII	HAW.	BR-083-1(58)	2023	87	129

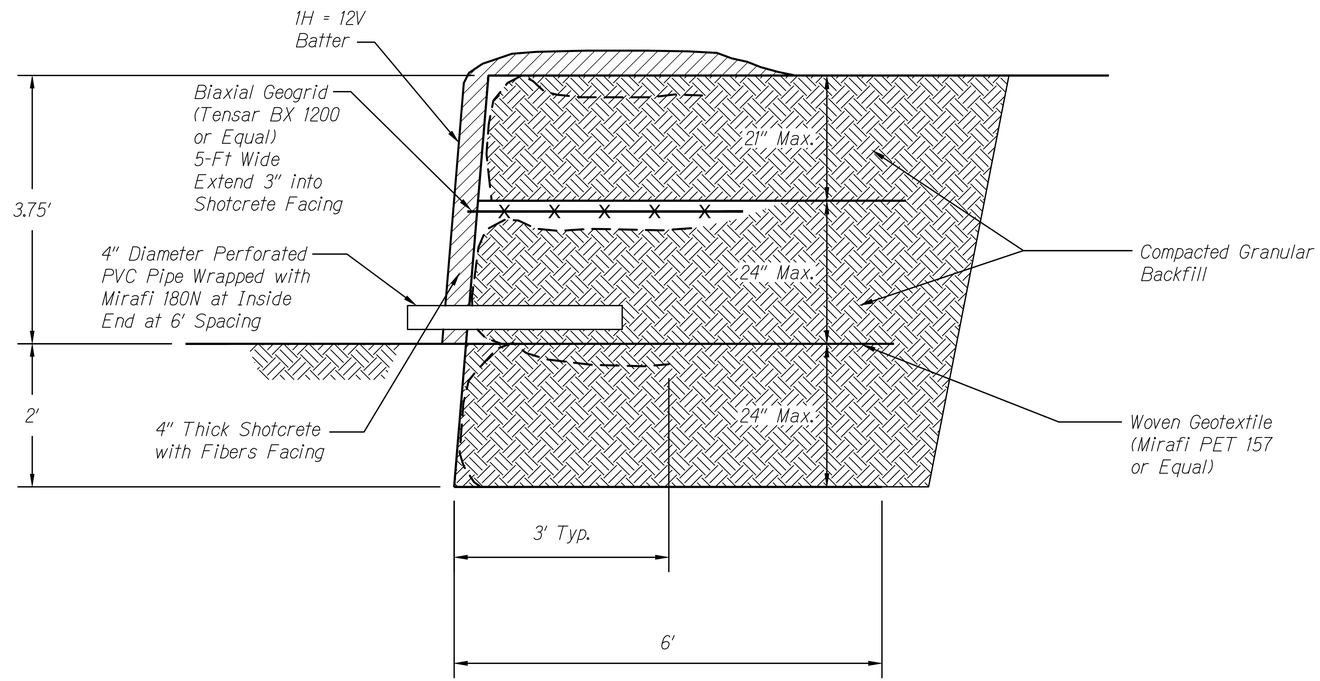

TYPICAL GEOTEXTILE FABRIC RETAINING WALL

Scale: N.T.S.

GERALD Y. SEKI
LICENSED PROFESSIONAL ENGINEER
No.5635-C
HAWAII, U.S.A.

LICENSE EXPIRES 4/30/24

THIS WORK WAS PREPARED BY
ME OR UNDER MY SUPERVISION

STATE OF HAWAII
DEPARTMENT OF TRANSPORTATION
HIGHWAYS DIVISION

TYPICAL GEOTEXTILE FABRIC
RETAINING WALL SECTION

KAMEHAMEHA HIGHWAY
Laieloa Stream Bridge Replacement
Federal-Aid Project No. BR-083-1(58)

Scale: As Shown Date: September 2023

SHEET No. B9 OF 10 SHEETS

ORIGINAL PLAN
NOTE BOOK No.
SURVEY PLOTTED BY
DRAWN BY
TRACED BY
DESIGNED BY
QUANTITIES BY
CHECKED BY
DATE

FED. ROAD DIST. NO.	STATE	FED. AID PROJ. NO.	FISCAL YEAR	SHEET NO.	TOTAL SHEETS
HAWAII	HAW.	BR-083-1(58)	2023	88	129

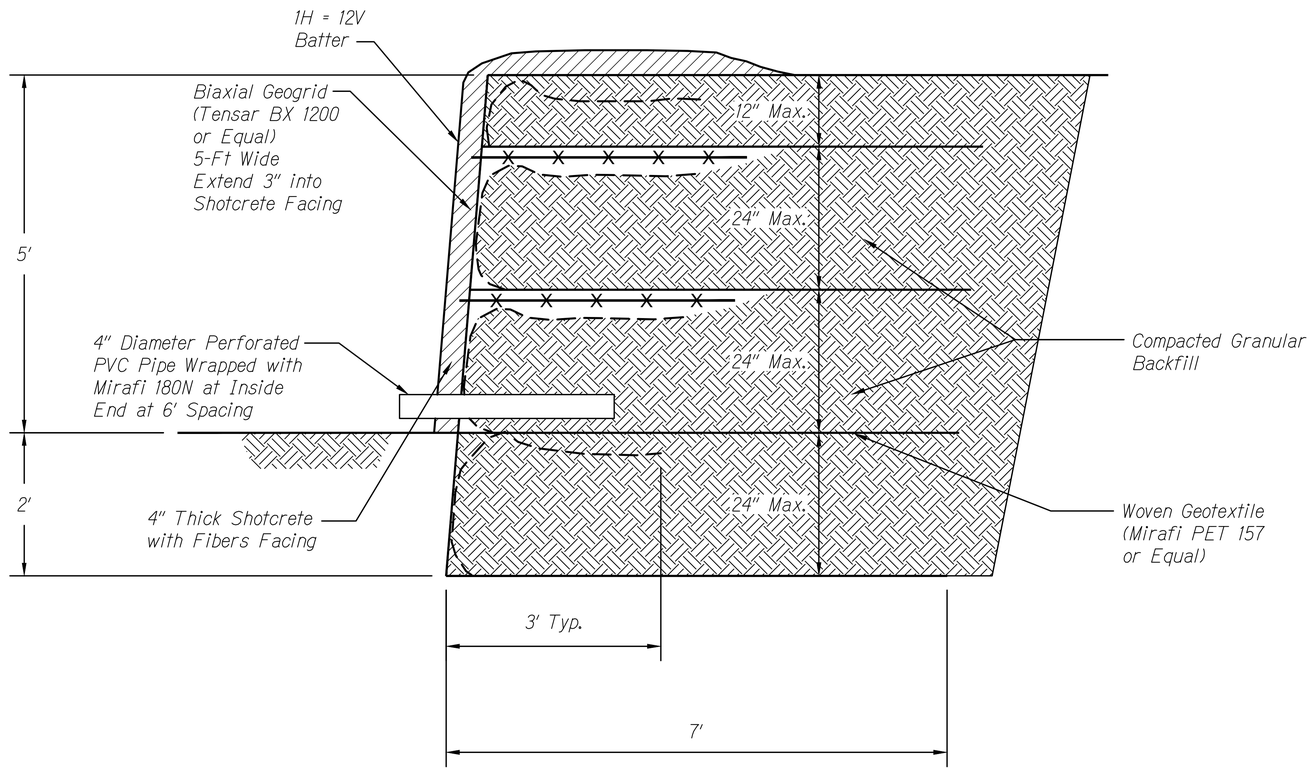

TYPICAL GEOTEXTILE FABRIC RETAINING WALL

Scale: N.T.S.

ORIGINAL PLAN	SURVEY PLOTTED BY	DATE
	DRAWN BY	"
	TRACED BY	"
NOTE BOOK	DESIGNED BY	"
	QUANTITIES BY	"
No.	CHECKED BY	"

GERALD Y. SEKI
LICENSED PROFESSIONAL ENGINEER
No.5635-C
HAWAII, U.S.A.

LICENSE EXPIRES 4/30/24

THIS WORK WAS PREPARED BY ME OR UNDER MY SUPERVISION

STATE OF HAWAII
DEPARTMENT OF TRANSPORTATION
HIGHWAYS DIVISION

TYPICAL GEOTEXTILE FABRIC RETAINING WALL SECTION

KAMEHAMEHA HIGHWAY
Laieloa Stream Bridge Replacement
Federal-Aid Project No. BR-083-1(58)

Scale: As Shown Date: September 2023

SHEET No. B10 OF 10 SHEETS

FED. ROAD DIST. NO.	STATE	FED. AID PROJ. NO.	FISCAL YEAR	SHEET NO.	TOTAL SHEETS
HAWAII	HAW.	BR-083-1(58)	2023	89	129

GENERAL NOTES:

1. All Work Shall Be Done In Accordance With The "Hawaii Standard Specifications For Road, Bridge, And Public Works Construction", 2005, State Of Hawaii Department Of Transportation, Highways Division, Except As Modified Herein Or In The Special Provisions.

2. Plans Do Not Indicate Complete Existing Electrical Conditions. Contractor Shall Visit Jobsite To Become Familiar With All Existing Conditions And Extent Of Demolition And New Work Prior To The Start Of Work.

3. Prior To The Start Of Work, Contractor Shall Visit Jobsite And Report Any Discrepancies And/Or Differences In Drawings, In Respect To Existing Condition, To The Engineer.

4. Contractor Shall Resolve All Discrepancies And Questions Prior To Start Of Work. No Extra Payment Shall Be Allowed On Account Of Work Made Necessary By Contractor's Failure To Visit The Jobsite And/Or Failure To Resolve Discrepancies And Questions.

5. The Contractor Is To Comply With The Directions Of The State Of Hawaii Occupational Safety And Health Law (DOSH).

6. The Contractor Shall Verify With The Respective Utility Companies And Government Agencies, The Locations Of All Electric, Telephone, Roadway Light, Water, Sewer, Drain, And Other Lines Crossing The Excavation Path Or In Excavation Areas.

7. The Contractor Shall Notify All Affected Utility Companies And Government Agencies Of Their Intent To Begin Construction On Any Intersection Or Street At Least Five (5) Months Prior To The Start Of Such Construction.

8. The Contractor Shall Install All Roadway Lighting Luminaires, Poles, Roadway Lighting Pole Foundations, Risers From Pullboxes To Foundations, And Wiring As Specified In These Plans And The Specifications.

9. The Contractor Shall Coordinate With The State Handling Of All Salvageable Materials Indicated To Be Removed.

10. The Contractor Shall Temporarily Relocate All Existing Overhead Utilities During Construction To Facilitate The Removal And Replacement Of The Existing Bridge And Provide Temporary Lighting And Wiring For The Temporary Bypass Road As Shown On Sheets E-7 & E-8. The Contractor Shall Be Responsible For Coordinating All Utility Work With The Respective Utility Companies Prior To The Start Of Work.

11. Roadway Lighting Criteria:
    a. Minimum Average Maintained Illumination Level: 0.6 Fc
    b. Maximum (Average To Minimum Maintained Footcandle) Uniformity Ratio: 4 To 1
    c. Maintenance Factor: 0.76
    d. Provide Roadway Illumination Calculations (Per AASHTO Recommendations)
    Certifying Conformance With Minimum Average Maintained Illumination Levels And Maximum (Average To Minimum Maintained Footcandles) Uniformity Ratio
    e. Submit Computerized Point-to-Point Footcandle Array
    f. The Temporary and Permanent Roadway Lighting Systems Shall Comply With The Criteria Listed Above.
    g. Roadway Lighting Support Structures Shall Be In Accordance with:
        (i) State of Hawaii, DOT, Highways Division; Design Criteria for Bridges and Structures April 15, 2008.
        (ii) AASHTO Standard Specifications for Structural Supports for Highway Signs, Luminaires and Traffic Signals, 6th Edition, 2013 Including Subsequent Interim Revisions.
        (iii) Basic Wind Speed = 105 MPH
        (iv) Mean Recurrence Level: Detour Road = 10 Years
        Kamehameha Hwy = 100 Years

12. Contractor Shall Completely Restore All Roadways Disturbed By The Construction. All Restoration Work Shall Conform To The "Hawaii Standard Specifications For Road, Bridge, And Public Works Construction", 2005, State Of Hawaii Department Of Transportation, Highays Division.

ELECTRICAL SYMBOLS

Symbol	Description
	Wood Utility Pole
	Roadway Light Fixture And Mast Arm Mounted To Wood Utility Pole.
	Parking Lot Light Pole
	Indicates Wooden Utility Pole w/ Utility Riser
	Guy Wire And Anchor
	High Pressure Sodium Light Fixture Mounted To Top Of Bridge Structure. See A/E-14 For Detail.
	Conduit Stubout
—·—e—	Existing Conduit Concealed Below Grade
—·—	Conduit Concealed Below Grade
—E—	Electrical Overhead Utility Line By Respective Utility Co.
---e---	Existing Electrical Overhead Utility Lines
—SL—	Overhead Roadway Lighting Conductors
	Vehicle Loop Detector, See Sheet E-19
	Existing Traffic Pullbox
	2' X 4' Traffic Pullbox. See Sheet E-22
(A)	Duct Section Designator, Section "A" Indicated. See Sheet E-15 For Duct Section Details.

ORIGINAL PLAN	SURVEY PLOTTED BY	DATE
	DRAWN BY	"
NOTE BOOK	TRACED BY	"
	DESIGNED BY	"
	QUANTITIES BY	"
No.	CHECKED BY	"

2023-07-31 1:16 PM Z:\Acad\projects\28059\E001_28059 Symb

BILLY J. ORNELLAS
LICENSED PROFESSIONAL ENGINEER
No. 11658-E
HAWAII, U.S.A.

LICENSE EXPIRES 4/30/24

THIS WORK WAS PREPARED BY ME OR UNDER MY SUPERVISION

STATE OF HAWAII
DEPARTMENT OF TRANSPORTATION
HIGHWAYS DIVISION

ELECTRICAL SYMBOLS, GENERAL NOTES

Kamehameha Highway
Laieloa Stream Bridge Replacement
Federal-Aid Project No. BR-083-1(58)

Scale: NONE Date: September 2023

SHEET No. E-1 OF 22 SHEETS

FED. ROAD DIST. NO.	STATE	FED. AID PROJ. NO.	FISCAL YEAR	SHEET NO.	TOTAL SHEETS
HAWAII	HAW.	BR-083-1(58)	2023	90	129

HAWAIIAN ELECTRIC COMPANY (HECO) NOTES:

1. Location of Hawaiian Electric Facilities

The Location of Hawaiian Electric's Overhead and Underground Facilities Shown on the Plans are from Existing Records with Varying Degrees of Accuracy and are Not Guaranteed as Shown. The Contractor Shall Verify in the Field the Locations of the Facilities and Shall Exercise Proper Care in Excavating and Working in the Area. Wherever Connections of New Utilities to Existing Utilities and Utility Crossings are Shown, the Contractor Shall Expose the Existing Lines at the Proposed Connections and Crossings to Verify the Depths Prior to Excavation for the New Lines. The Contractor Shall Be Responsible for Any Damages to Hawaiian Electric's Facilities Whether Shown or Not Shown on the Plans.

2. Compliance with Hawaii Occupational Safety and Health Laws

The Contractor Shall Comply with the State of Hawaii's Occupational Safety and Health Laws and Regulations, Including Without Limitation, Those Related to Working on or Near Exposed or Energized Electrical Lines and Equipment.

3. Excavation Clearance

The Contractor Shall Obtain an Excavation Clearance from Hawaiian Electric's Planning and Design Section of the Transmission & Distribution Engineering Department (543-5654) Located at 820 Ward Avenue, 4th Floor, a Minimum of Ten (10) Working Days Prior to Starting Construction.

4. Caution!!! Electrical Hazard!!!

Existing Hawaiian Electric Overhead and Underground Lines are Energized and Will Remain Energized During Construction Unless Prior Special Arrangements Have Been Made with Hawaiian Electric. Only Hawaiian Electric Personnel are to Handle These Energized Lines and Erect Temporary Guards to Protect These Lines from Damage. The Contractor Shall Work Cautiously at All Times to Avoid Accidents and Damage to Existing Hawaiian Electric Facilities, Which Can Result in Electrocution.

5. Overhead Lines

State Law (OSHA) Requires that a Worker and the Longest Object He or She may Contact Cannot Come Closer Than a Specified Minimum Radial Clearance When Working Close to or Under Any Overhead Lines. It is the Contractor's Responsibility to be Informed of and Comply with the Law.

At Any Time Should the Contractor Anticipate that His Work will Result in the Need to Encroach within the Minimum Required Clearance as Stated in the Law, the Contractor Shall Notify Hawaiian Electric at Least Three (3) Months Prior to the Planned Encroachment so that, if Feasible, the Necessary Protections (E.G. Relocate or De-Energize Hawaiian Electric Lines) Can Be Investigated. Hawaiian Electric May Also Be Able to Blanket its Distribution (12kV and Below) Lines to Provide a Visual Aid in Preventing Accidental Contact. Hawaiian Electric's Cost of Safeguarding or Identifying its Lines will be Charged to the Contractor.

Contact Hawaiian Electric's Customer Relations at 543-7070 for Assistance in Identifying and Safeguarding Overhead Power Lines.

6. Pole Bracing

a. Contractor Shall Not Excavate within 10 Feet of Hawaiian Electric's Utility Poles or Any Anchor System Supporting the Utility Pole. If Contractor Must Excavate an Area More that 12 Inches Deep by 12 Inches Wide, and Closer Than 10 Feet From a Utility Pole or its Anchor System, Contractor Will Be Responsible for Protecting, Supporting, Securing and Taking All Precautions to Prevent Damage to or Leaning Of Existing Poles. Before Commencing Such Excavation, Contractor Must Notify Hawaiian Electric Which May Lead to Implementing Pole Bracing Requirements. Hawaiian Electric Requires A Minimum of Ten (10) Working Days to Conduct the Review of Contractor's Submittal. Contractor Shall Submit Its Bracing Calculations and Drawings, Prepared and Stamped By A Licensed Structural Engineer, to Hawaiian Electric's Customer Relations (543-7070) For Review. Contractor Shall Be Responsible For the Design, Installation, and Removal of the Temporary Pole Bracing System, As Well As All Costs Incurred By Hawaiian Electric To Review Contractor's Drawings And To Repair Or Straighten Poles Impacted By Contractor's Activities, Including Response and Restoration Costs Incurred By Hawaiian Electric Arising Out of or Related to Outages Caused By Contractor's Failure to Meet the Foregoing Requirements. Hawaiian Electric's Receipt of Pole Bracing Calculation or Drawing Submittals of Any Contractor, Including Work Procedure, Shall Not Relieve Contractor From Any Liability Resulting From Contractor's Excavation Near or Around Hawaiian Electric's Utility Poles.

b. Hawaiian Electric May Provide to the Customer Information Related to Pole Bracing, Including Calculations and Other Basic Engineering. However, Hawaiian Electric Provides this Information for Informational Purposes Only and Does Not Warrant Any of the Information Provided to Customer. Hawaiian Electric Hereby Disclaims Any Liability Associated with the Customer's Use of Information Provided to the Customer from Hawaiian Electric. It is the Customer's Duty to Obtain Engineering from Its Own Engineer or Contractor In Order to Brace Poles and the Use of Hawaiian Electric's Information Does Not Excuse the Customer From Performing Its Own Evaluation of the Bracing Needs. Should the Customer Install Bracing at Any Pole Location, Customer Shall Defend, Indemnify and Hold Harmless Hawaiian Electric from Any Third Party Claims Associated with the Customer's Bracing of a Pole. Should the Work Customer Perform at or Near the Pole Location Compromise the Pole or Its Surroundings in Any Way, Customer Shall Restore or Replace the Pole so that it is No Longer Compromised.

7. Underground Lines

The Contractor Shall Exercise Extreme Caution Whenever Construction Crosses or is in Close Proximity of Underground Lines. Hawaiian Electric's Existing Electrical Cables are Energized and Will Remain Energized During Construction. Only Hawaiian Electric Personnel are to Break into Existing Hawaiian Electric Facilities, Handle These Cables, and Erect Temporary Guards to Protect These Cables from Damage. The Cost of Hawaiian Electric's Assistance in Providing Proper Support and Protection of its Underground Lines Will Be Charged to the Contractor. For Assistance/Coordination in Providing Proper Support and Protection of these Lines, the Contractor Shall Call Hawaiian Electric's Customer Relations at 543-7070 a Minimum of Ten (10) Working Days in Advance.

Special Precautions are Required When Excavating Near Hawaiian Electric's 138kV or 46kV Underground Lines (See Hawaiian Electric Instructions to Consultants/Contractors on "Excavation Near Hawaiian Electric's Underground 138kV and/or 46kV Lines" for Detailed Requirements).

For Verification of Underground Lines, the Contractor Shall Call the Hawaii One Call Center at 866-423-7287 Minimum of Five (5) Working Days in Advance.

8. Underground Fuel Pipelines

The Contractor Shall Exercise Extreme Caution Whenever Construction Crosses or is in Close Proximity of Hawaiian Electric's Underground Fuel Oil Pipelines. Special Precautions are Required When Excavating Near Hawaiian Electric's Underground Fuel Oil Pipelines (See Hawaiian Electric's Specific Fuel Pipeline "Guidelines" to Consultants/Contractors on Excavation Near Hawaiian Electric's Underground Fuel Pipelines for Detailed Requirements).

9. Excavations

When Trench Excavation is Adjacent to or Beneath Hawaiian Electric's Existing Structures or Facilities, the Contractor is Responsible for:

a) Arranging for Hawaiian Electric Standby Personnel to Observe Work at Contractor's Cost.
b) Sheeting, Bracing, or Otherwise Supporting the Excavation and Stabilizing the Existing Ground to Render it Safe and Secure and to Prevent Possible Slides, Cave-Ins, and Settlements.
c) Properly Supporting Existing Structures or Facilities with Beams, Struts, Under-Pinnings, or Other Necessary Methods to Fully Protect it from Damage.
d) Backfilling with Proper Backfill Material Including Special Thermal Backfill where Existing (Refer to Engineering Division for Thermal Backfill Specifications).

10. Relocation of Hawaiian Electric Facilities

Any Work Required to Relocate or Modify Hawaiian Electric Facilities Shall Be Done by Hawaiian Electric, or by the Contractor Under Hawaiian Electric's Supervision. The Contractor Shall Be Responsible for All Coordination, and Shall Provide Necessary Support for Hawaiian Electric's Work, Which May Include, but not be Limited to, Staking of Pole/Anchor Locations, Identifying Right of Way and Property Lines, Excavation and Backfill, Permits and Traffic Control, Barricading, and Restoration of Pavement, Sidewalks, and Other Facilities.

All Costs Associated with Any Relocation or Modification (Either Temporary or Permanent) for the Convenience of the Contractor, or to Enable the Contractor to Perform His Work in a Safe and Expeditious Manner in
Fulfilling His Contract Obligations Shall Be Borne by the Contractor.

11. Conflicts

Any Redesign or Relocation of Hawaiian Electric's Facilities Not Shown on the Plans May Be Cause for Lengthy Delays. The Contractor Acknowledges that Hawaiian Electric is Not Responsible for Any Delay or Damage that May Arise as a Result of Any Conflicts Discovered or Identified with Respect to the Location or Construction of Hawaiian Electric's Electrical Facilities in the Field, Regardless of Whether the Contractor has Met the Requested Minimum Advance Notices. In Order to Minimize Any Delay or Impact Arising from Such Conflicts, Hawaiian Electric Should Be Notified Immediately Upon Discovery or Identification of Such Conflict.

12. Damage to Hawaiian Electric Facilities

The Contractor Shall Be Responsible for the Protection of All Hawaiian Electric Surface and Subsurface Utilities and Shall Be Responsible for Any Damages to Hawaiian Electric's Facilities as a Result of His Operations. The Contractor Shall Immediately Report Such Damages or Any Hazardous Conditions Related to Hawaiian Electric's Lines to Hawaiian Electric's Trouble Dispatcher at 548-7961. Repair Work Shall Be Done by Hawaiian Electric or by the Contractor Under Hawaiian Electric's Supervision. Costs for Damages to Hawaiian Electric's Facilities Shall Be Borne by the Contractor.

In Case of Damage or Suspected Damage to Hawaiian Electric's Fuel Pipeline, The Contractor Shall Immediately Notify Hawaiian Electric's Security Command Center at 543-7685 (a 24-Hour Number) so Hawaiian Electric Personnel Can Secure the Damaged Section and Report any Oil Spills to the Proper Authorities. All Costs Associated with the Damage, Repair, and Oil Spill Cleanup Shall Be Borne by the Contractor.

DRAWING REVIEW

Reviewed for Hawaiian Electric Company Facilities Only

Req# _____ By _____ Date _____

Customer Installations Department
Hawaiian Electric

Hawaiian Electric's review of these drawings shall in no way relieve the Customer, its Consultant, its Contractor or anyone acting on the Customer's behalf from the responsibility for engineering, design, materials and any other liability associated with this project including revisions made beyond the reviewed date.

BILLY J. ORNELLAS
LICENSED PROFESSIONAL ENGINEER
No. 11658-E
HAWAII, U.S.A.

LICENSE EXPIRES 4/30/24

THIS WORK WAS PREPARED BY ME OR UNDER MY SUPERVISION

STATE OF HAWAII
DEPARTMENT OF TRANSPORTATION
HIGHWAYS DIVISION

HECO NOTES

Kamehameha Highway
Laielua Stream Bridge Replacement
Federal-Aid Project No. BR-083-1(58)

Scale: NONE Date: September 2023

SHEET No. E-2 OF 22 SHEETS

ORIGINAL PLAN | SURVEY PLOTTED BY | DRAWN BY | TRACED BY | DESIGNED BY | QUANTITIES BY | CHECKED BY | DATE
NOTE BOOK No.

2021-09-27 8:18 AM Z:\Acad\projects\29059\D02_29059 Note1

HAWAIIAN ELECTRIC COMPANY NOTES (Continued)

13. Hawaiian Electric Stand-By Personnel

The Contractor May Request Hawaiian Electric to Provide an Inspector to Stand-By During Construction near Hawaiian Electric's Facilities. The Cost of Such Inspection Will Be Charged to the Contractor.

The Contractor Shall Call Hawaiian Electric's Customer Relations at 543-7070 a Minimum of Three (3) Months in Advance to Arrange for Hawaiian Electric Stand-By Personnel.

14. Clearances

The Following Clearances Shall Be Maintained Between Hawaiian Electric's Ductline and All Adjacent Structures (Charted and Uncharted) in the Trench: (See Table)

The Contractor Shall Notify the Construction Manager & Hawaiian Electric of Any Heat Sources (Power Cable Duct Bank, Steamline, Etc.) Encountered that are Not Properly Identified on the Drawing.

15. Indemnity

The Contractor Shall Indemnify, Defend and Hold Harmless Hawaiian Electric from and Against All Losses, Damages, Claims, and Actions, Including But Not Limited to Reasonable Attorney's Fees and Costs Based Upon or Arising Out of Damage to Property or Injuries to Persons, or Other Tortious Acts Caused or Contributed to by Contractor or Anyone Acting Under its Direction or Control or on its Behalf; Provided Contractor's Indemnity Shall Not Be Applicable to Any Liability Based Upon the Sole Negligence of Hawaiian Electric.

Additional Notes when Work Involves Construction of Hawaiian Electric Facilities

16. Schedule

Contractor Shall Furnish his Construction Schedule Six (6) Months Prior to Starting Work on Hawaiian Electric Facilities. Contractor Shall Give Hawaiian Electric, in Writing, Three (3) Months Notice to Proceed with Hawaiian Electric's Portion of Work.

17. Authority

All Construction, Restoration Work, and Inspection Shall Be Subject to Whichever Governmental Agency Has Authority Over the Work.

18. Specifications

Construction of Hawaiian Electric's Underground Facilities Shall Be Constructed in Accordance with the Latest Revisions of Hawaiian Electric Specifications CS7001, CS7003, CS7202, CS9301, and CS9401 and Applicable Hawaiian Electric Standards.

19. Construction

Contractor Shall Furnish All Labor, Materials, Equipment, and Services to Properly Perform and Fully Complete All Work Shown on the Contract, Drawings, and Specifications. All Materials Shall Be New and Manufactured in the United States of America. All Manhole, Handhole, and Ductline Installations Shall Be Inspected and Approved By Hawaiian Electric Prior to Excavation and Prior to Placing Concrete. Contractor Shall Notify Hawaiian Electric's Inspection Group at 543-2567 at Least Five (5) Working Days Prior to Installing Facilities or Placing Concrete.

Contractor to Coordinate Work to Break into Hawaiian Electric's Existing Electrical Facilities with Hawaiian Electric's Inspection Group at 543-2567 at Least Ten (10) Working Days in Advance.

20. Stakeout

The Contractor Shall Arrange for Toneouts of All Underground Facilities and Shall Stakeout All Proposed Hawaiian Electric Facilities within the Project Area so as to Not Conflict with Any Utility (Existing or Proposed) and Any Proposed Construction or Improvement Work for Verification by Hawaiian Electric Before Proceeding with Hawaiian Electric Work.

21. Ductlines

All Ductline Installations Shall Be PVC Schedule 40 Encased in Concrete, Unless Otherwise Noted. All Completed Ductlines Shall Be Mandrel Tested by the Contractor in the Presence of Hawaiian Electric's Inspector Using Hawaiian Electric's Standard Practice. The Contractor Shall Install 1800# Tensile Strength Muletape Pull Line in All Completed Ductlines After Mandrel Testing is Complete.

22. Joint Pole Removal

The Last Joint Pole Occupant of the Poles Shall Remove the Poles.

23. As-Built Plans

The Contractor Shall Provide Hawaiian Electric with a Set of Electronic and Hard Copy Plans of Each Sheet Showing the Offsets, Stationing, and Vertical Elevation of the Duct Line(s) Constructed.

Guidelines for Minimum Horizontal (parallel) Clearances Between Hawaiian Electric and Other Underground Utilities

Underground Utility	Hawaiian Electric Direct Buried Cable	Hawaiian Electric Direct Buried in Conduit (No Concrete Encasement)	Hawaiian Electric 3" (Minimum) Concrete Encasement	Applicable Notes:
Hawaiian Electric DB Conduits	12"	3"	0"	
Hawaiian Electric 3" Encasement	0"	0"	0"	
Telephone/CATV DB	12"	12"	6"	
Telephone/CATV DB Ducts	12"	12"	6"	
Telephone/CATV 3" Encasement	0"	0"	0"	5
Traffic Signal	12"	12"	12"	
Water DB (BWS Owned)	36"	36"	36"	1, 4
Customer Owned Water Service Laterals	12"	12"	12"	
Water (Concrete Jacketed) (BWS Owned)	36"	36"	36"	1, 4
Gas DB	12"	12"	12"	1
Gas (Concrete Jacketed)	12"	12"	12"	1
Sewer DB	36"	36"	36"	1, 2
Sewer (Concrete Jacketed)	36"	36"	36"	1, 2
Drain	12"	12"	12"	1
Fuel Pipelines				3

Notes:

1. Where Space is Available, Parallel Clearance to Other Utilities, or Foreign Structures Other Than Communication or Traffic Signal Shall Be 36"
2. If 36" Clearance Cannot Be Met:
   - If Clearance is Less Than 12", Jacket Sewer Line with Reinforced Concrete (Per HECO's Std. 30-1030) for a Distance of 5' Plus Pipe Diameter.
   - If Clearance is Between 12" and 36", Jacket Sewer Line with Plain Concrete.
3. All Fuel Pipeline Crossings Shall Be Reviewed and Approved by the Company That Owns and Maintains it.
4. 5 Feet Clear to Water Mains 16" or Larger.
5. For Situations with 0" Minimum Separation, a 6" Separation is Recommended.
6. Clearances Measured from Outer Edges or Diameters of Utilities. Whenever Concrete Jackets are Involved, Clearances Shall Be Total Clear Distance Between the Concrete Jacket and Utility Concerned.

DRAWING REVIEW

Reviewed for Hawaiian Electric Company Facilities Only

Req# _____ By _____ Date _____

Customer Installations Department
Hawaiian Electric

Hawaiian Electric's review of these drawings shall in no way relieve the Customer, its Consultant, its Contractor or anyone acting on the Customer's behalf from the responsibility for engineering, design, materials and any other liability associated with this project including revisions made beyond the reviewed date.

BILLY J. ORNELLAS
LICENSED PROFESSIONAL ENGINEER
No. 11658-E
HAWAII, U.S.A.

LICENSE EXPIRES 4/30/24

THIS WORK WAS PREPARED BY ME OR UNDER MY SUPERVISION

STATE OF HAWAII
DEPARTMENT OF TRANSPORTATION
HIGHWAYS DIVISION

HECO NOTES 2

Kamehameha Highway
Laieloa Stream Bridge Replacement
Federal-Aid Project No. BR-083-1(58)

Scale: NONE Date: September 2023

SHEET No. E-3 OF 22 SHEETS

ORIGINAL PLAN | SURVEY PLOTTED BY | DRAWN BY | TRACED BY | DESIGNED BY | QUANTITIES BY | CHECKED BY | DATE
NOTE BOOK No.

2021-09-27 8:16 AM Z:\Acad\projects\28059\E003_28059_Note2

HAWAIIAN ELECTRIC COMPANY NOTES (Continued)

Guidelines for Minimum Vertical (Crossing) Clearances Hawaiian Electric and Other Underground Utilities

Underground Utility	Hawaiian Electric Direct Buried Cable	Hawaiian Electric Direct Buried In Conduit (No Concrete Encasement)	Hawaiian Electric 3" (Minimum) Concrete Encasement	Applicable Notes:
Hawaiian Electric DB Conduits	6"	3"	0"	
Hawaiian Electric 3" Encasement	0"	0"	0"	
Telephone/CATV DB	12"	12"	6"	
Telephone/CATV DB Ducts	12"	12"	6"	
Telephone/CATV 3" Encasement	0"	0"	0"	3
Traffic Signal	12"	12"	6"	
Water DB (BWS Owned)	12"	12"	12"	5
Customer Owned Water Service Laterals	6"	6"	6"	
Water (Concrete Jacketed) (BWS Owned)	12"	12"	12"	5
Gas DB	12"	12"	12"	
Gas (Concrete Jacketed)	12"	12"	12"	
Sewer DB	24"	24"	24"	1
Sewer (Concrete Jacketed)	24"	24"	24"	1
Drain	12"	12"	6"	
Fuel Pipelines				2

Notes:

1. If Clearance Cannot be Met:
   - If Clearance is Less Than 12", Jacket Sewer Line with Reinforced Concrete (Per HECO's Std. 30-1030) for a Distance of 5' Plus Pipe Diameter.
   - If Clearance is Between 12" and 24", Jacket Sewer Line with Plain Concrete.
2. All Fuel Pipeline Crossings Shall Be Reviewed and Approved by the Company That Owns and Maintains it.
3. For Situations with 0" Minimum Separation, a 6" Separation is Recommended.
4. Clearances Measured from Outer Edges or Diameters of Utilities. Whenever Concrete Jackets are Involved, Clearances Shall Be Total Clear Distance Between the Concrete Jacket and Utility Concerned.
5. 36" Clearance is Required for Trenchless Installation Work.

HAWAIIAN TELCOM (HTCO) NOTES:

1. The Contractor Shall Procure and Pay for All Licenses and Permits and Shall Give All Notices Necessary and Incident to the Due and Lawful Prosecution of the Work.

2. The Contractor Shall Obtain an Excavation Permit and Toning Request from Hawaiian Telcom's Excavation Permit Section, Located at 1177 Bishop Street, Two Weeks Prior to the Start of Construction. Hours of Business are 8:00 A.M. to 11:00 A.M. and 12:00 P.M. to 3:00 P.M. Monday Through Friday, Except Holidays.

3. Prior to the Excavation of the Ductline, the Contractor Shall Request Hawaiian Telcom to Locate Existing Ductline Wherever Required. For Underground Cable Locating and Marking, Five (5) Working Days Advance Notice is Required. Three (3) Working Days Advance Notice is Required for Any Inspection by a Designated Representative.

4. The Locations of Existing Utilities are Approximate Only. The Contractor Shall Exercise Extreme Caution and Shall Maintain Proper Clearances Whenever Construction Crosses or is in Close Proximity of Hawaiian Telcom Facilities. The Contractor Shall Verify Their Locations and Shall Be Liable for Any Damages to Hawaiian Telcom Facilities. Any Damages Shall Be Reported Immediately to Hawaiian Telcom's Repair Section at #611 (24 Hours) or to the Excavation Permit Section at 546-7746 (Normal Working Hours, Monday through Friday, Except Holidays). As a Result of His Operations, Adjustments to the New Ductline Alignment, if Required, Shall Be Made to Provide the Required Clearances.

5. The Contractor Shall Take Necessary Precaution Not to Damage Existing Cables or Ducts. A Hawaiian Telcom Inspector or Designated Representative is Required to Be at Any Job Site Whenever There Will Be a Breakage into or Entry into Any Structure that Contain Hawaiian Telcom Facilities. Temporary Cable and Duct Supports Shall Be Provided Wherever Necessary.

6. the Contractor Shall Notify Hawaiian Telcom's Inspector or Designated Representative a Minimum of 72 Hours Prior to Excavation, Bracing, or Backfilling of Hawaiian Telcom's Structures or Facilities.

7. all Applicable Construction Work Shall Be Done in Accordance with the "Hawaiian Telcom Standard Specifications for Placing Telephone Systems" Dated January 2007, All Subsequent Amendments and Additions, and All Other Pertinent Standards for Telephone Construction. Contractor Shall Familiarize His Personnel by Obtaining Applicable Specifications.

8. When Excavation is Adjacent to or Beneath Hawaiian Telcom's Existing Structures \or Facilities, The Contractor Shall:

   A. Sheet and/or Brace the Excavation to Prevent Slides, Cave-Ins, or Settlements to Ensure No Movement to Hawaiian Telcom's Structures or Facilities.

   B. Protect Existing Structures and/or Facilities with Beams, Struts, or Underpinning While Excavating Beneath them to Ensure No Movement to Hawaiian Telcom's Structures or Facilities.

9. The Contractor Shall Brace All Poles or Light Standards Near the New Ductline, Manhole, or Handhole During His Operations.

10. The Contractor Shall Saw-Cut AC. Pavement and Concrete Gutter Wherever New Manholes, Handholes, or Ductlines are to be Placed and Shall Restore to Existing Condition or Better.

11. The Contractor Shall Comply with the Policy Adopted by the Department of Planning and Permitting, City and County of Honolulu, Concerning the Replacement of Concrete Sidewalks After Excavation Work.

12. The Underground Pipes, Cables, or Ductlines Known to Exist by the Engineer from His Search of Records are Indicated on the Plans. The Contractor Shall Verify the Locations and Depths of the Facilities and Exercise Proper Care in Excavating in the Area. Wherever Connections of New Utilities to Existing Utilities are Shown on the Plans, the Contractor Shall Expose the Existing Lines at the Proposed Connections to Verify Their Locations and Depths Prior to Excavation for the New Lines.

13. Wherever Connections to Existing Utilities are Shown on the Plans, the Contractor Shall Expose the Existing Lines Prior to Excavation of the Main Trenches to Verify Their Locations and Depths.

14. the Contractor, at His Own Expense, Shall Keep the Project and Surrounding Area Free from Dust Nuisance. The Cost for Supplementary Measures, Which Will be Required by the City and County, Shall Be Borne By the Contractor.

15. The Contractor Shall Pump All Manholes Dry During Final Inspection.

16. The Contractor Shall Notify Hawaiian Telcom Inspector 24 Hours Prior to the Pouring of Concrete or Backfilling.

17. when Connecting to Manhole Walls, All Existing Reinforcing Bars Shall Be Left Intact. Ducts Shall Be Adjusted in the Field in Order to Clear Reinforcing

18. The Contractor Shall Be Responsible for Laying Out All Required Lines and Grades and Shall Preserve All Bench Marks and Working Points Necessary to Lay Out the Work Correctly. The New Ductline Shall Be Adjusted by the Contractor to Suit the Existing Conditions and the Details as Described in the Plans.

19. Minimum Concrete Strength Shall Be:
   - for Ductline 2500 PSI at 28 Days
   - for Manhole 3000 PSI at 28 Days or as Specified in Design Notes

20. Bends in the Duct Alignment, Due to Changes in Grade Shall Have a Minimum Radius of 25 Feet. All 90 Degree C-Bends at a Pole or at the Building Floor Slab Penetration, Shall Have a Bend Radius of Ten Times the Diameter of the Duct or Greater.

21. After Ductline has been Completed, a Mandrel with a Square Front Not Less Than 12" Long and Having a Diameter of 1/4" Less Than the Inside Diameter of the Duct, Shall Be Pulled Through Each Duct After Which a Brush with Stiff Bristles Shall Be Pulled Through to Make Certain that No Particles of Earth, Sand, or Gravel Have Been Left Inside. Ducts Shall Be Completely Dry and Clean.

22. All Ducts and Conduits Shall Have an 1800# Polyester Mule-Tape (Neptco, WP1800P, Hawaiian Telcom Material Code No. 571154) Installed Throughout its Entire Length. All Ducts Shall Be Capped to Prevent Entry of Foreign Material During Construction and at the Completion of Installation.

APPROVED BY

_____ DATE

HAWAIIAN TELCOM

DRAWING REVIEW

Reviewed for Hawaiian Electric Company Facilities Only

Req# _____ By _____ Date _____

Customer Installations Department
Hawaiian Electric

Hawaiian Electric's review of these drawings shall in no way relieve the Customer, its Consultant, its Contractor or anyone acting on the Customer's behalf from the responsibility for engineering, design, materials and any other liability associated with this project including revisions made beyond the reviewed date.

BILLY J. ORNELLAS
LICENSED PROFESSIONAL ENGINEER
No. 11658-E
HAWAII, U.S.A.

LICENSE EXPIRES 4/30/24

THIS WORK WAS PREPARED BY ME OR UNDER MY SUPERVISION

STATE OF HAWAII
DEPARTMENT OF TRANSPORTATION
HIGHWAYS DIVISION

HECO & HTCO NOTES

Kamehameha Highway
Laieloa Stream Bridge Replacement
Federal-Aid Project No. BR-083-1(58)

Scale: NONE Date: September 2023

SHEET No. E-4 OF 22 SHEETS

ORIGINAL PLAN | SURVEY PLOTTED BY | DRAWN BY | TRACED BY | DESIGNED BY | QUANTITIES BY | CHECKED BY | DATE
NOTE BOOK No.

2021-09-27 8:16 AM Z:\Acad\projects\28059\E004_28059 Note3

FED. ROAD DIST. NO.	STATE	FED. AID PROJ. NO.	FISCAL YEAR	SHEET NO.	TOTAL SHEETS
HAWAII	HAW.	BR-083-1(58)	2023	93	129

Spectrum Oceanic (CATV) Notes:

1. The Contractor Shall Procure and Pay for All Licenses and Permits and Shall Give All Notices Necessary and Incident to the Due and Lawful Prosecution of the Work.

2. The Locations of Existing Utilities are Approximate Only. The Contractor Shall Verify their Locations and Shall Be Responsible for Any Damages to these Utilities as a Result of His Operations. Adjustments to the New Ductline Alignment, If Required, Shall Be Made to Provide the Required Clearances.

3. The Contractor Shall Brace All Poles or Light Standards Near the New Ductline, Manhole or Handhole During its Operations.

4. the Contractor Shall Saw-Cut A.C. Pavement, Concrete Gutter, and Concrete Sidewalk Wherever New Manholes, Handholes, Pullboxes or Ductlines are to Be Placed and Shall Restore to Existing Condition or Better.

5. The Underground Pipes, Cables, or Ductlines Known to Exist by the Engineer from His Search of Records are Indicated on the Plans. The Contractor Shall Verify the Locations and Depths of the Facilities and Exercise Proper Care in Excavating in the Areas. Wherever Connections of New Utilities to Existing Utilities are Shown On the Plans, the Contractor Shall Expose the Existing Lines at the Proposed Connections to Verify Their Locations and Depths Prior to Excavation for the New Lines.

6. The Contractor, at His Own Expense, Shall Keep the Project and Surrounding Area Free from Dust Nuisance. The Cost for Supplementary Measures, Which Will Be Required by the City And County, Shall Be Borne by the Contractor.

7. Prior to the Excavation of the Ductline, the Contractor Shall Request Spectrum Oceanic to Locate Existing Ductline Wherever Required.

8. The Contractor Shall Take Necessary Precaution Not to Damage Existing Cables or Ducts. Any Work Involving Existing Cables or Ducts Shall Be Done in the Presence of the Spectrum Oceanic's Inspector or His Representative. Temporary Cable and Duct Support Shall Be Provided Wherever Necessary.

9. The Contractor Shall Notify the Spectrum Oceanic Inspector 72 Hours Prior to the Start of Work nn CATV Infrastructure, Pouring Concrete, or Backfilling. Spectrum Oceanic's Inspector(s): Perry Samuelu at 387-2496 or Paul Caspillo at 479-1637.

10. Wherever Connections to Existing Utilities are Shown On the Plans, the Contractor Shall Expose the Existing Lines Prior to Excavation of the Main Trenches to Verify Their Locations and Depths.

11. Contractor Shall Provide All Materials and Furnish All Labor and Equipment Necessary to Install the Ductline In Place Complete.

12. The Contractor Shall Be Responsible for Laying Out All Required Lines and Grades and Shall Preserve All Bench Marks and Working Points Necessary to Lay Out the Work Correctly. The New Ductline Shall Be Adjusted By the Contractor to Suit the Existing Conditions and the Details as Described in the Plans.

13. The Contractor, At His Own Expenses, Shall Keep the Project Area Free from Dust Nuisance. The Work Shall Be in Conformance with the Air Pollution Control Standards and Regulations of the State Of Hawaii, Department of Health.

14. The Location f CATV Facilities Shown On Plans are from Existing Records with Varying Degrees of Accuracy as to its Actual Fixed Location. The Contractor Shall Use Extreme Caution When Working in Close Proximity of CATV Facilities.

15. The Contractor Shall Obtain Excavation Permit Clearance from Spectrum Oceanic's Engineering Section Located at 200 Akamainui St., Mililani Tech Park.

16. For Any Field Assistance or Verification of CATV Facilities, the Contractor Shall Call Spectrum Oceanic at 625-2100 and Ask for the OSP Engineering Department.

17. Any Work Required to Relocate CATV Facilities Shall Be Done by Spectrum Oceanic and the Contractor Shall Be Responsible for All Coordination Requirements and Associated Costs.

18. Any Damage To Spectrum Oceanic's Facilities Shall Be Reported to Spectrum Oceanic's TOC Department at 625-8169.

19. The Contractor Shall Tunnel Under Existing Concrete Curb and Gutter as Necessary to Extend Conduit into Existing CATV Pullbox and into the Proposed Power Supply Pullbox.

20. All Existing Improvements that are Disturbed During the Construction Phase Shall Be Restored to its Original or Better Condition at No Cost to the City And County In Accordance with City's Standards.

21. At Locations Where Existing Catv Pullbox Replacement is Proposed, the Contractor Shall Take All Necessary Precaution Not to Damage the Existing Cables in the Pullbox. All Damages to Existing Cables Shall Be Repaired by Spectrum Oceanic and Paid for by the Contractor.

22. Coordinate All Penetration of Telephone Pullboxes with Hawaiian Telcom Inspector.

23. Smooth Finish Inside Wall of Existing Pullboxes and Handholes to its Original Condition or Better.

24. All New Concrete Encased Conduit Shall Be PVC Pipe-Schedule 40. All New Direct-Buried Conduit Shall Be PVC Pipe-Schedule 80. Use of Any Other Material Type (GTS, Etc) Shall Be Limited to Matching Existing Facilities. Connection of Dissimilar Materials to Require Approval from Spectrum Oceanic's Inspector and Engineering Dept.

25. The Contractor Shall Place Poly Cord Throughout Project, and Secure in Manholes, Handholes and Pullboxes.

26. For 3" Conduits or Larger, the Contractor Shall Install Neptco WP1800 Muletape or Approved Equal in All Ductlines, Leave Muletape in Place for Future Use as a Pull or Fish Line, Unless Otherwise Noted. Reference GTE Material Code No. 571154. All Ducts Shall Be Capped to Prevent Entry of Foreign Material During Construction and at Completion of Installation. Endbells are Required for Conduits 2" and Larger.

27. Penetration into Pullboxes if Necessary to be from Factory Installed Opening or from Bricks Position. Penetration from Pullbox Walls is Not Acceptable.

28. Bends in the Duct Alignment, Due to Changes in Grade Shall Have a Minimum Radius ff 20-feet. All 90-Degree C-Bends at a Pole or at the Building Floor Slab Penetration, Shall Have A Bend Radius Of 10 Times the Diameter of the Duct or Greater.

29. Minimum Length of Conduit Used Shall Not Be Less than 5-feet in Length. Use of Partial Conduit Sections Allowable is at Spectrum Oceanic's Inspector(s) Discretion.

30. All Conduits Shall Enter Through the End "Short Wall" of The Pullbox. Entry Shall Be at 90 Degrees (Perpendicular) to Wall Face with Bends No Less than 12" from Exterior Wall.

31. A Minimum of (2) Precast Riser Sections Must Be Used on All 2x4 or 2x6 Pullboxes.

32. All New Construction Shall Utilize Concrete Precast Base Unless Otherwise Approved or Specified by Spectrum Oceanic's Inspector(s).

33. When Three (3) Or More 4" Conduits Enter One End Wall of Any Pullbox, Only Brick Bases will be Allowed Unless Otherwise Instructed/Approved by Spectrum Oceanic's Inspector(s).

34. Two Minimum Layers of Bricks to be Used Lower than the Lowest Duct Entering the Pullbox. Top Layer of Brick to be Flush with Top of Conduit or Higher.

35. For Upgrade/Repairs to Existing Pullboxes, Bricks May Be Used and Shall Always be at Least Two Layers Lower than the Lowest Duct Entering the Pullbox.

36. At No Time Shall Cement Mortar, Wood or Any Other Material be Used Between Precast Sections.

37. Leveling or Raising of Boxes to Grade Must Be Done:
    A. Pre-Cast Base(s) - Using Gravel Layer Under Base (Type 3B or Equivalent Approved by Spectrum Oceanic's Inspector
    B. Brick Base(s) - Adjustments to Brickwork Section. the Permanent Installation of Wooden Wedges to Accomplish this Purpose Will Not Be Accepted.

38. 5/8" Copper Ground Rods Shall Be Placed in All Pullboxes Unless Otherwise Directed by Spectrum Oceanic. Ground Rods Will Be Placed in the Corner 3" to 4" from the Wall and Away from Any Conduit with No More than 8" Sticking Up Above Ground.

39. Trenching to be by Hand Digging Near and Across Existing Utility Lines.

40. Minimum Clearance Between Street Light Stand and Fire Hydrants Shall Be Three Feet.

41. Underground Utilities Shown Hereon is for Information Only. No Guarantee is made on the Accuracy or Completeness of said Installation.

42. For Underground Cable Locating and Marking, Five Working Days Advance Notice is Required. Three Working Days Advance Notice is Required for Any Inspection by a Designated Representative. Contractor Shall Take Necessary Precaution Not to Damage Any Existing Cables or Ducts. Spectrum Oceanic's Inspector or Designated Representative is Required to be at Any Job Site Wherever there Will Be a Breakage into or Entry into Any Structure that Contain Spectrum Oceanic's Facilities.

43. Concrete Strength Shall Be 3000 PSI in 28 Days.

44. Curing and Backfilling. Maintain Concrete in a Moist Condition for 24 Hours Minimum for 3,000 PSI and 48 Hours Minimum for 2,500 PSI Before Compacted Backfilling; 72 Hours Minimum Before Permitting Motor Traffic Load on Ductline Curing Method Shall Meet Spectrum Oceanic's Inspector's Approval.

APPROVED BY:

HAWAIIAN TELCOM DATE

SPECTRUM OCEANIC DATE

BILLY J. ORNELLAS
LICENSED PROFESSIONAL ENGINEER
No. 11658-E
HAWAII, U.S.A.

LICENSE EXPIRES 4/30/24

THIS WORK WAS PREPARED BY ME OR UNDER MY SUPERVISION

STATE OF HAWAII
DEPARTMENT OF TRANSPORTATION
HIGHWAYS DIVISION

SPECTRUM NOTES

Kamehameha Highway
Laielua Stream Bridge Replacement
Federal-Aid Project No. BR-083-1(58)

Scale: NONE Date: September 2023

SHEET No. E-5 OF 22 SHEETS

ORIGINAL PLAN	SURVEY PLOTTED BY	DATE
	DRAWN BY	
NOTE BOOK	TRACED BY	
	DESIGNED BY	
	QUANTITIES BY	
No.	CHECKED BY	

2023-04-06 10:15 AM Z:\Acad\projects\29059\E005_29059 Note4

FED. ROAD DIST. NO.	STATE	FED. AID PROJ. NO.	FISCAL YEAR	SHEET NO.	TOTAL SHEETS
HAWAII	HAW.	BR-083-1(58)	2023	94	129

Spectrum Oceanic (CATV) Notes (Continued):

45. Install 4-mil. Thick Orange Color Warning Tape 3-Inch Wide, Entire Length of Trench when Placing CATV Conduits. Tape Should Read "Caution Buried Cable Line Below". Manufactured by Harris Industries, Inc., Catalog Number UT-43 or Equivalent Tape. Tape to be Installed 12-Inches Below Grade.

46. After Ductline has been Completed, a Mandrel with a Square Front Not Less Than 12-Inch Long and Having a Diameter or 1/4-Inch Less Than the Inside Diameter of Duct, Shall Be Pulled Through Each Duct after which a Brush with Stiff Bristles Shall Be Pulled Through to Make Certain that No Particles of Earth, Sand, or Gravel Have Been Left Inside. Ducts Shall Be Completely Dry and Clean.

47. Metallic Entrance Conduits Shall Be Grounded.

48. All Conduits Within a Building Shall:
    A. Be Installed in the Shortest And Straightest Possible Run.
    B. Have No Section Longer Than 100-feet Nor Contain More Than Two 90-Degree Bends. An Approved Sized Junction Box rr Gutter Box Shall Be Placed if this is Exceeded.
    C. All Bends Shall Be Long Sweep-Radius Bends But the Inside Radius of the Bend Must Never Be Less Than Ten Times the Diameter of the Conduit.

49. All Construction Must Be Inspected and Approved by Spectrum Oceanic Prior to the Installation of Any of its Facilities and the Energizing of its System.

50. Contractor and/or Customer Shall Provide Spectrum Oceanic with Sufficient Installation Time in Their Occupancy Time Table.

51. For pullbox locations were vehicular intrusion possible, concrete collar required per spectrum standard and specifications manual. examples include but not limited to, rolled curbs, curb/headers less than 5" in height, vehicular travelways with no defined curb/header, etc.

    A. Non sidewalk area, see figure 18.1c, 19.1c and 20.1b in the Spectrum specifications manual.

Network Enterprise Center General Construction Notes:

1. All Work Impacting Us Army Signal Corps Telecommunications Facilities And Infrastructure Shall Be Complete In Accordance With:

   -Military Standards And Us Army Regulations (Current Version)

   -US Army Technical Criteria For The Installation Information Infrastructure Architecture (I3A) Dated February 2010 (or Most Current).

   -National Electric Code (NEC) And National Electric Safety Code (NESC) (Most Current Version)

   -ANSI/TIA/EIA Telecommunication Standards

   -National Electrical Manufacturers Association (NEMA) Bulletin No. TCB 2-2000

2. Excavation Permit

   2.1. Us Army Excavation Permit: The Contractor Shall Obtain, Process And Have An Approved Excavation Permit From The Us Army, Directorate Of Public Works Located In Building 682, At 451 Brannon Road, Wheeler Army Airfield, Hawaii. The Excavation Permit Form Shall Be Completed And Approved A Minimum Of Two Weeks Prior To Beginning Construction.

   2.2. One Call Center Form: The One Call Center Form May Be Utilized In Lieu Of The Us Army Excavation Permit Form. The Submission Shall Include A Map Of The Areas Affected By Excavations. The One Call Center Form Shall Be Completed And Approved A Minimum Of Two Weeks Prior To Beginning Any Construction. Submission Of This Form Shall Be Submitted To: Network Enterprise Center - Hawaii, Infrastructure Management Group, Bldg 600, 148 Curtis Loop, Room 157, Wheeler Army Airfield, Hawaii.

3. The Contractor Shall Ensure The Following For Osp Placements:

   3.1. All Duct Joints Shall Be Reamed To Avoid Burrs, Obstructions Or Areas Where The Mandrel Will Not Flow Freely Or Smoothly. Contractors Shall Utilize The Nema Bulletin No. TCB 2-2000 For The General Guidelines On The Selection And Installation Of Underground Non-metallic Duct.

   3.2. All Protruding Surfaces In The Communication Ducts At The Joints Or Connections Points Shall Be Repaired Or Replaced By The Contractor Until Accepted By The Government And The Government Service Provider.

   3.3. All New Communication Ducts Shall Be Swabbed (Cleaned), And Bi-directional Mandrel Tested By The Contractor. Bi-directional Testing Shall Be Witnessed By A Government Representative For Acceptance By The Government And Government Service Provider. Ducts Shall Be Completely Dry And Clean (Free Of Dirt, Rocks And Debris).

   3.4. Mandrels Shall Flow Through Freely And Smoothly With No Noticeable Obstructions Or Hang-ups.

   3.5. All Equipment And Personnel For Mandrel Testing Shall Be Provided By The Contractor.

   3.6. Mandrels Used For Communication Duct Testing Shall Be 12 Inches In Length, Solid, Non-tapered, With A Diameter Of 0.25 Inch Less Than The Inner Diameter Of The Ducts Being Tested.

   3.7. Contractor Shall Provide Details Of The Mandrel Test Equipment To Be Used For Government Approval 30 Days Prior To Testing.

   3.8. Contractor Shall Provide Schedule Of Mandrel Testing For Government Approval 15 Days Prior To Any Testing.

4. The Contractor Shall Ensure The Casting Of All "New" Maintenance Holes Covers Shall Bear The Imprinting Of The Words "USA Signal Corps." Inside The Neck Of the Maintenance Hole Shall Be Permanently Labeled With The Maintenance Hole Identifier Provided By The Government.

5. The Contractor Shall Obtain And Fund For All Required Permits, Notices, Licenses And Authorizations For The Intended Work For Federal And Us Military Facilities And Infrastructure.

6. The Contractor Shall Be Responsible To Validate Military And Defense Cables Identified And Shall Ensure Other Utilities/facilities Both Aerial And Underground Are Secured And Not Impacted Druing Operation. Outages And Damages To Other Utilities Shall Be The Responsibility Of The Contractor.

7. The Contractor Shall Contact The Network Enterprise Center Hawaii Point Of Contact, 72-hours Prior To Any Physical Work To Be Performed On Us Army Infrastructure And Facilities.

8. -Network Enterprise Center Hawaii Points Of Contact:
   - Mr. James "JB" Benton (808)787-3514
   - Mr. Walter Selders (808)787-5357
   - Mr. Bart Wynn (808)787-1799

9. The following contractors are vendors who may perform work on the NETCOM cables:
   -Choy Enterprises Incorporated (808)479-4607
   -Henkels and McCoy (808)455-1310
   -Verizon Federal (808)484-7990

10. Prior to the start of work, contractor is to forward the One Call Center form to: Department of the Army
    30th Signal Battalion/Network Enterprise Technology Command
    148 Curtis Loop, Wheeler Army Airfield
    Building 600, Room 157
    Schofield Barracks, Hawaii 96857-5020

Department Of Design & Construction - Mechanical/Electrical Division Notes:

1. The Contractor Shall Notify The Joint Pole Committee Two (2) Weeks In Advance Of Any Relocation Of Utility Pole(s) That May Be Necessary.

2. The Contractor Shall Notify The Mechanical/electrical Division, Department Of Design And Construction, Three (3) Working Days Prior To Commencing Work On The Street Lighting System (Phone: 768-8431).

3. The Street Lighting Shall Be Kept Operational During Construction. Any Relocation Or Changeover Required Shall Be Approved By The Mechanical/electrical Division, Department Of Design And Construction, And Performed And Paid For By The Contractor.

4. The Locations Of The Existing Underground Street Light Facilities Shown On The Plans Are From Existing Plans And Are Approximate Only. The Contractor Shall Exercise Caution When Construction Crosses Or Is In Close Proximity To The Existing Street Light Facilities. The Contractor Shall Be Responsible For Any Damages To The Existing Street Light Facilities. Any And All Damages To These Facilities Shall Be Repaired By The Contractor At His Cost In Accordance With The Requirements Of The City And County Of Honolulu.

5. The Contractor Shall Be Responsible For Any Damages To The Existing Communications Fiber Optic Cable System. Any And All Damages To These Facilities Shall Be Repaired By The Contractor At His Cost In Accordance With The Requirements Of The City And County Of Honolulu.

ORIGINAL PLAN	SURVEY PLOTTED BY	DATE
NOTE BOOK	DRAWN BY	
	TRACED BY	
	DESIGNED BY	
	QUANTITIES BY	
No.	CHECKED BY	

2023-04-06 10:18 AM Z:\Acad\projects\29059\006_29059 Note5

APPROVED BY:

HAWAIIAN TELCOM — DATE

SPECTRUM OCEANIC — DATE

BILLY J. ORNELLAS — LICENSED PROFESSIONAL ENGINEER No. 11658-E — HAWAII, U.S.A.

LICENSE EXPIRES 4/30/24

THIS WORK WAS PREPARED BY ME OR UNDER MY SUPERVISION

STATE OF HAWAII
DEPARTMENT OF TRANSPORTATION
HIGHWAYS DIVISION

SPECTRUM NOTES, NETCOM NOTES

Kamehameha Highway
Laieloa Stream Bridge Replacement
Federal-Aid Project No. BR-083-1(58)

Scale: NONE — Date: September 2023

SHEET No. E-6 OF 22 SHEETS

FED. ROAD DIST. NO.	STATE	FED. AID PROJ. NO.	FISCAL YEAR	SHEET NO.	TOTAL SHEETS
HAWAII	HAW.	BR-083-1(58)	2023	95	129

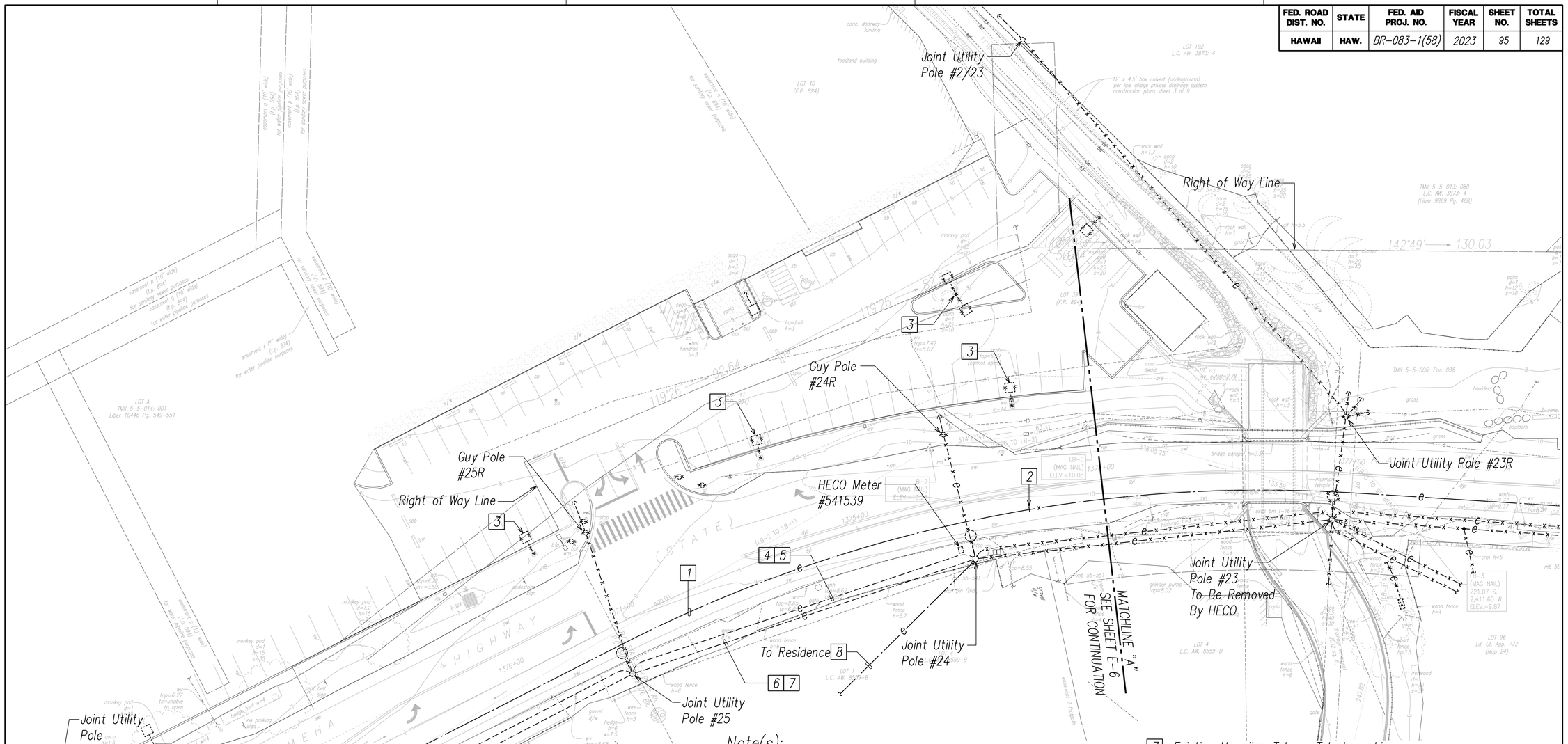

ELECTRICAL DEMOLITION PLAN I

SCALE: 1"=20'

NORTH

Note(s):

1. All Items Shown Are Existing Unless Otherwise Noted.
2. "X" Thru Item Denotes "Existing Item To Be Removed"
3. Coordinate Utility Work With Respective Utility Companies.
4. 1 Existing 50 Pair Signal Corps Joint Trunk System Cable, Direct Buried.
   2 Intercept Existing 50 Pair Signal Corps Joint Trunk System Cable to Facilitate Installation of New Signal Corps Manhole.
   3 Remove Existing Parking Lot Light Pole and Store for Reinstallation After Completion of New Bridge.
   4 Existing 12.47KV Heco Primary Electric Lines.
   5 Existing 120/240V Heco Secondary Electric Lines.
   6 Existing Spectrum Cable CATV Line.
   7 Existing Hawaiian Telcom Telephone Line.
   8 Existing Hawaiian Electric 3" Underground Ductline and Pole Riser.

20' 10' 0 20' 40' 60'

SCALE: 1"=20'

GRAPHIC SCALE

BILLY J. ORNELLAS LICENSED PROFESSIONAL ENGINEER No. 11658-E HAWAII, U.S.A.

LICENSE EXPIRES 4/30/24

THIS WORK WAS PREPARED BY ME OR UNDER MY SUPERVISION

STATE OF HAWAII
DEPARTMENT OF TRANSPORTATION
HIGHWAYS DIVISION

ELECTRICAL DEMOLITION PLAN I

Kamehameha Highway
Laieloa Stream Bridge Replacement
Federal-Aid Project No. BR-083-1(58)

Scale: AS NOTED Date: September 2023

SHEET No. E-7 OF 22 SHEETS

ORIGINAL PLAN	SURVEY PLOTTED BY	DATE
	DRAWN BY	
	TRACED BY	
NOTE BOOK	DESIGNED BY	
	QUANTITIES BY	
No.	CHECKED BY	

2023-07-31 1:36 PM Z:\Acad\projects\29059\D007_29059_Elec Demo Plan 1

FED. ROAD DIST. NO.	STATE	FED. AID PROJ. NO.	FISCAL YEAR	SHEET NO.	TOTAL SHEETS
HAWAII	HAW.	BR-083-1(58)	2023	96	129

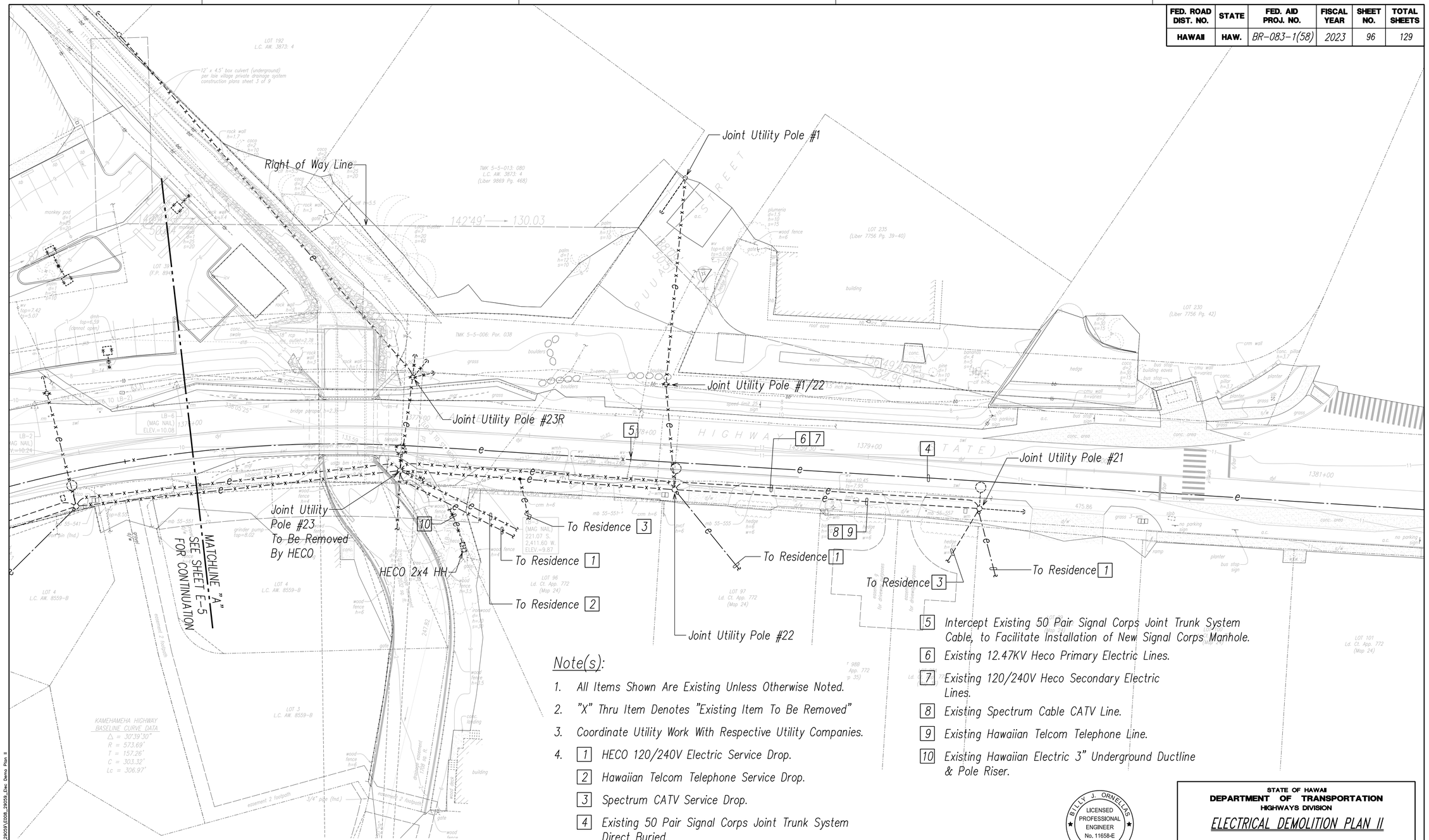

Note(s):

1. All Items Shown Are Existing Unless Otherwise Noted.
2. "X" Thru Item Denotes "Existing Item To Be Removed"
3. Coordinate Utility Work With Respective Utility Companies.
4. 1 HECO 120/240V Electric Service Drop.
   2 Hawaiian Telcom Telephone Service Drop.
   3 Spectrum CATV Service Drop.
   4 Existing 50 Pair Signal Corps Joint Trunk System Direct Buried.
   5 Intercept Existing 50 Pair Signal Corps Joint Trunk System Cable, to Facilitate Installation of New Signal Corps Manhole.
   6 Existing 12.47KV Heco Primary Electric Lines.
   7 Existing 120/240V Heco Secondary Electric Lines.
   8 Existing Spectrum Cable CATV Line.
   9 Existing Hawaiian Telcom Telephone Line.
   10 Existing Hawaiian Electric 3" Underground Ductline & Pole Riser.

NORTH

ELECTRICAL DEMOLITION PLAN II

SCALE: 1"=20'

20' 10' 0 20' 40' 60'

SCALE: 1"=20'

GRAPHIC SCALE

BILLY J. ORNELLAS
LICENSED PROFESSIONAL ENGINEER
No. 11658-E
HAWAII, U.S.A.

LICENSE EXPIRES 4/30/24

THIS WORK WAS PREPARED BY ME OR UNDER MY SUPERVISION

STATE OF HAWAII
DEPARTMENT OF TRANSPORTATION
HIGHWAYS DIVISION

ELECTRICAL DEMOLITION PLAN II

Kamehameha Highway
Laieloa Stream Bridge Replacement
Federal-Aid Project No. BR-083-1(58)

Scale: AS NOTED Date: September 2023

SHEET No. E-8 OF 22 SHEETS

96

ORIGINAL PLAN	SURVEY PLOTTED BY	DATE
	DRAWN BY	
	TRACED BY	
NOTE BOOK	DESIGNED BY	
	QUANTITIES BY	
No.	CHECKED BY	

2023-08-01 11:03 AM Z:\Acad\projects\29059\E008_29059_Elec Demo Plan II

FED. ROAD DIST. NO.	STATE	FED. AID PROJ. NO.	FISCAL YEAR	SHEET NO.	TOTAL SHEETS
HAWAII	HAW.	BR-083-1(58)	2023	97	129

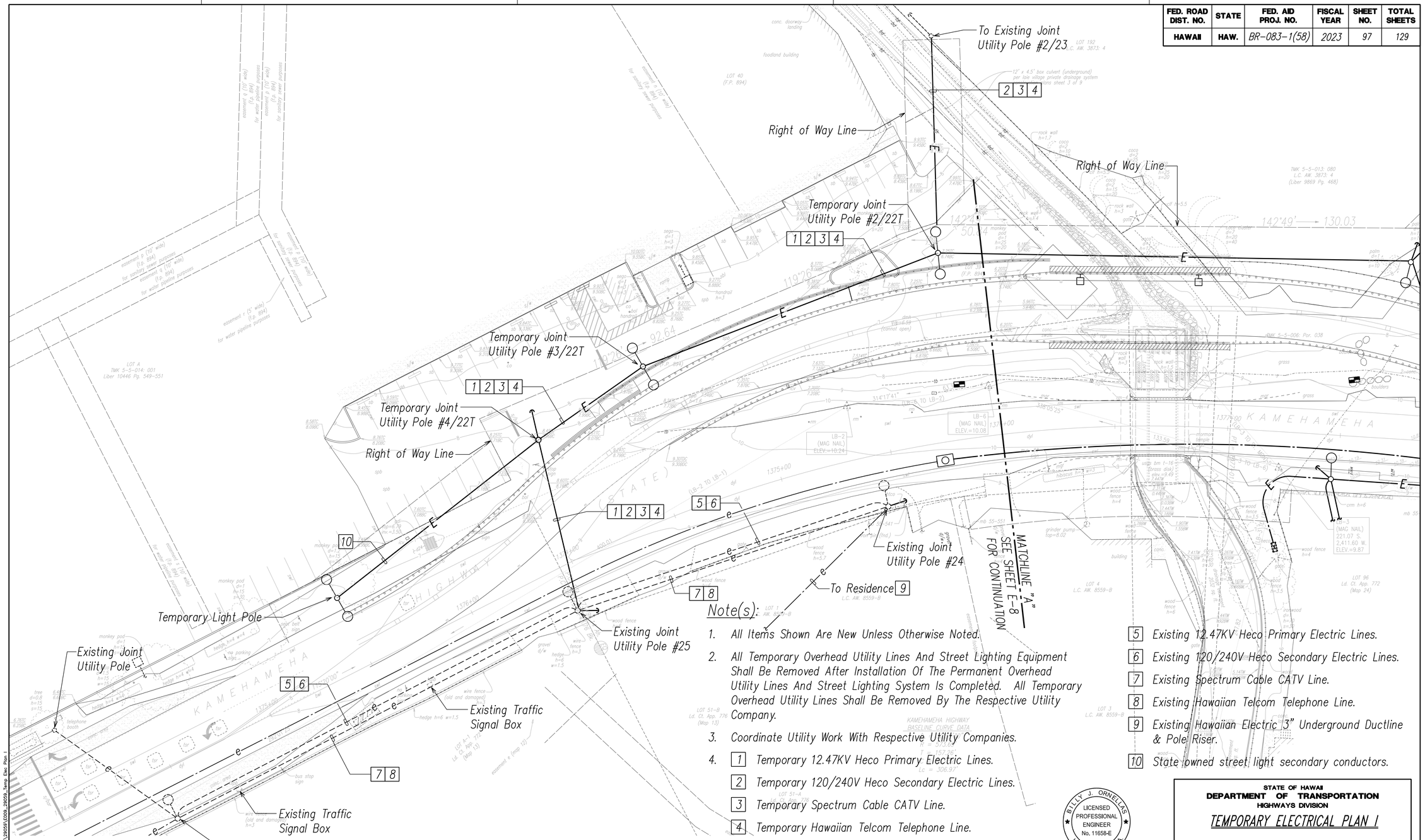

Note(s):

1. All Items Shown Are New Unless Otherwise Noted.
2. All Temporary Overhead Utility Lines And Street Lighting Equipment Shall Be Removed After Installation Of The Permanent Overhead Utility Lines And Street Lighting System Is Completed. All Temporary Overhead Utility Lines Shall Be Removed By The Respective Utility Company.
3. Coordinate Utility Work With Respective Utility Companies.
4. 1 Temporary 12.47KV Heco Primary Electric Lines.
   2 Temporary 120/240V Heco Secondary Electric Lines.
   3 Temporary Spectrum Cable CATV Line.
   4 Temporary Hawaiian Telcom Telephone Line.
   5 Existing 12.47KV Heco Primary Electric Lines.
   6 Existing 120/240V Heco Secondary Electric Lines.
   7 Existing Spectrum Cable CATV Line.
   8 Existing Hawaiian Telcom Telephone Line.
   9 Existing Hawaiian Electric 3" Underground Ductline & Pole Riser.
   10 State owned street light secondary conductors.

NORTH

TEMPORARY ELECTRICAL PLAN I

SCALE: 1"=20'

20' 10' 0 20' 40' 60'

SCALE: 1"=20'

GRAPHIC SCALE

BILLY J. ORNELLAS
LICENSED PROFESSIONAL ENGINEER
No. 11658-E
HAWAII, U.S.A.

LICENSE EXPIRES 4/30/24

THIS WORK WAS PREPARED BY ME OR UNDER MY SUPERVISION

STATE OF HAWAII
DEPARTMENT OF TRANSPORTATION
HIGHWAYS DIVISION

TEMPORARY ELECTRICAL PLAN I

Kamehameha Highway
Laieloa Stream Bridge Replacement
Federal-Aid Project No. BR-083-1(58)

Scale: AS NOTED Date: September 2023

SHEET No. E-9 OF 22 SHEETS

ORIGINAL PLAN	SURVEY PLOTTED BY	DATE
	DRAWN BY	
	TRACED BY	
NOTE BOOK	DESIGNED BY	
	QUANTITIES BY	
No.	CHECKED BY	

2023-08-01 2:30 PM Z:\Acad\projects\29059\0009_29059_Temp Elec Plan 1

FED. ROAD DIST. NO.	STATE	FED. AID PROJ. NO.	FISCAL YEAR	SHEET NO.	TOTAL SHEETS
HAWAII	HAW.	BR-083-1(58)	2023	98	129

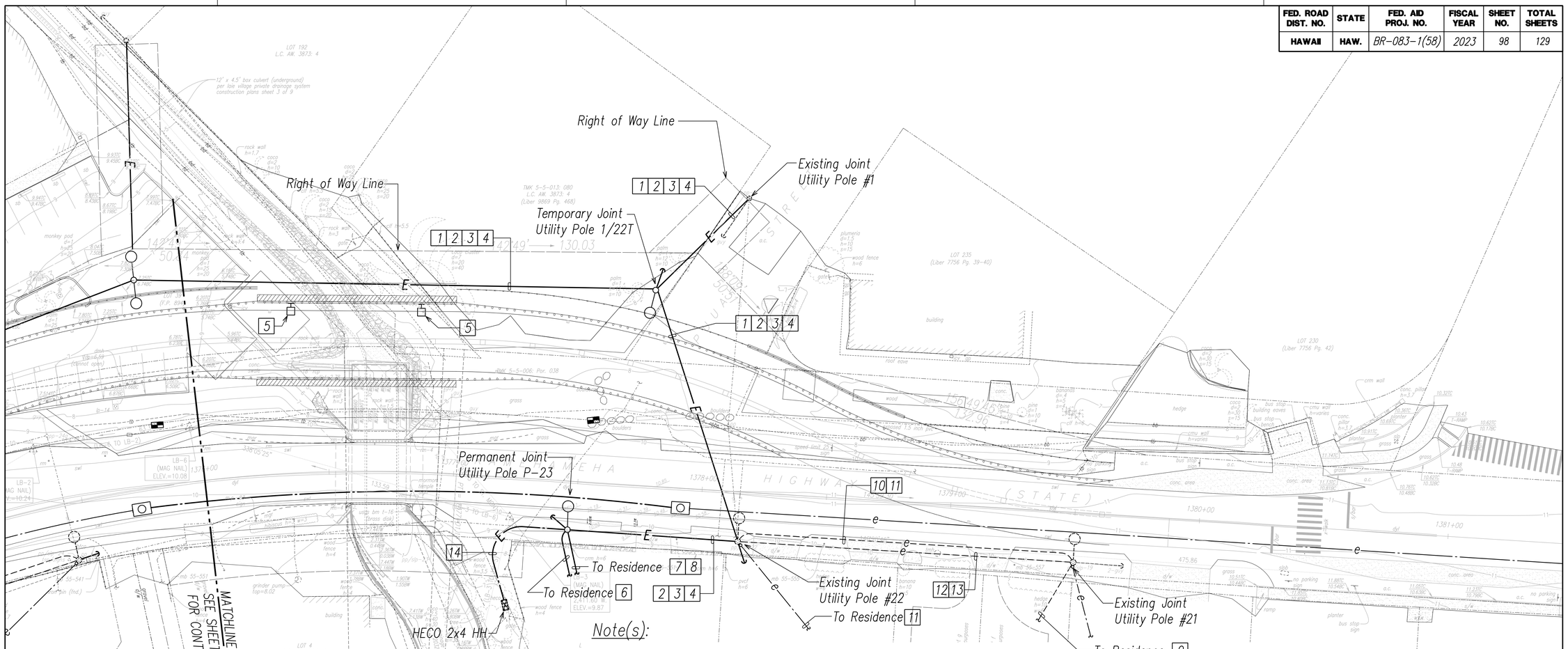

Note(s):

1. All Items Shown Are New Unless Otherwise Noted.
2. All Temporary Overhead Utility Lines And Street Lighting Equipment Shall Be Removed After Installation Of The Permanent Overhead Utility Lines And Street Lighting System Is Completed. All Temporary Overhead Utility Lines Shall Be Removed By The Respective Utility Company.
3. Coordinate Utility Work With Respective Utility Companies.
4. 1 Temporary 12.47KV Heco Primary Electric Lines.
   - 2 Temporary 120/240V Heco Secondary Electric Lines.
   - 3 Temporary Spectrum Cable CATV Line.
   - 4 Temporary Hawaiian Telcom Telephone Line.
   - 5 Surface Mounted High Pressure Sodium Light Fixture Mounted to Top of Temporary Bridge Structure. See A/E-12 for Detail.
   - 6 Permanent HECO 120/240V Electric Service Drop.
   - 7 Permanent Hawaiian Telephone Service Drop.
   - 8 Permanent Spectrum CATV Service Drop.
   - 9 Existing Spectrum CATV Service Drop.
   - 10 Existing 12.47KV Heco Primary Electric Lines.
   - 11 Existing 120/240V Heco Secondary Electric Lines
   - 12 Existing Spectrum Cable CATV Line.
   - 13 Existing Hawaiian Telcom Telephone Line.
   - 14 Permanent Hawaiian Electric 3" Underground Ductline & Pole Riser.

NORTH

TEMPORARY ELECTRICAL PLAN II

SCALE: 1"=20'

20' 10' 0 20' 40' 60'

SCALE: 1"=20'

GRAPHIC SCALE

BILLY J. ORNELLAS
LICENSED PROFESSIONAL ENGINEER
No. 11658-E
HAWAII, U.S.A.

LICENSE EXPIRES 4/30/24

THIS WORK WAS PREPARED BY ME OR UNDER MY SUPERVISION

STATE OF HAWAII
DEPARTMENT OF TRANSPORTATION
HIGHWAYS DIVISION

TEMPORARY ELECTRICAL PLAN II

Kamehameha Highway
Laieloa Stream Bridge Replacement
Federal-Aid Project No. BR-083-1(58)

Scale: AS NOTED Date: September 2023

SHEET No. E-10 OF 22 SHEETS

98

ORIGINAL PLAN	SURVEY PLOTTED BY	DATE
	DRAWN BY	
	TRACED BY	
NOTE BOOK	DESIGNED BY	
	QUANTITIES BY	
No.	CHECKED BY	

2023-08-01 11:02 AM E:\Acad\projects\28059\E010_28059_Temp Elec Plan II

FED. ROAD DIST. NO.	STATE	FED. AID PROJ. NO.	FISCAL YEAR	SHEET NO.	TOTAL SHEETS
HAWAII	HAW.	BR-083-1(58)	2023	99	129

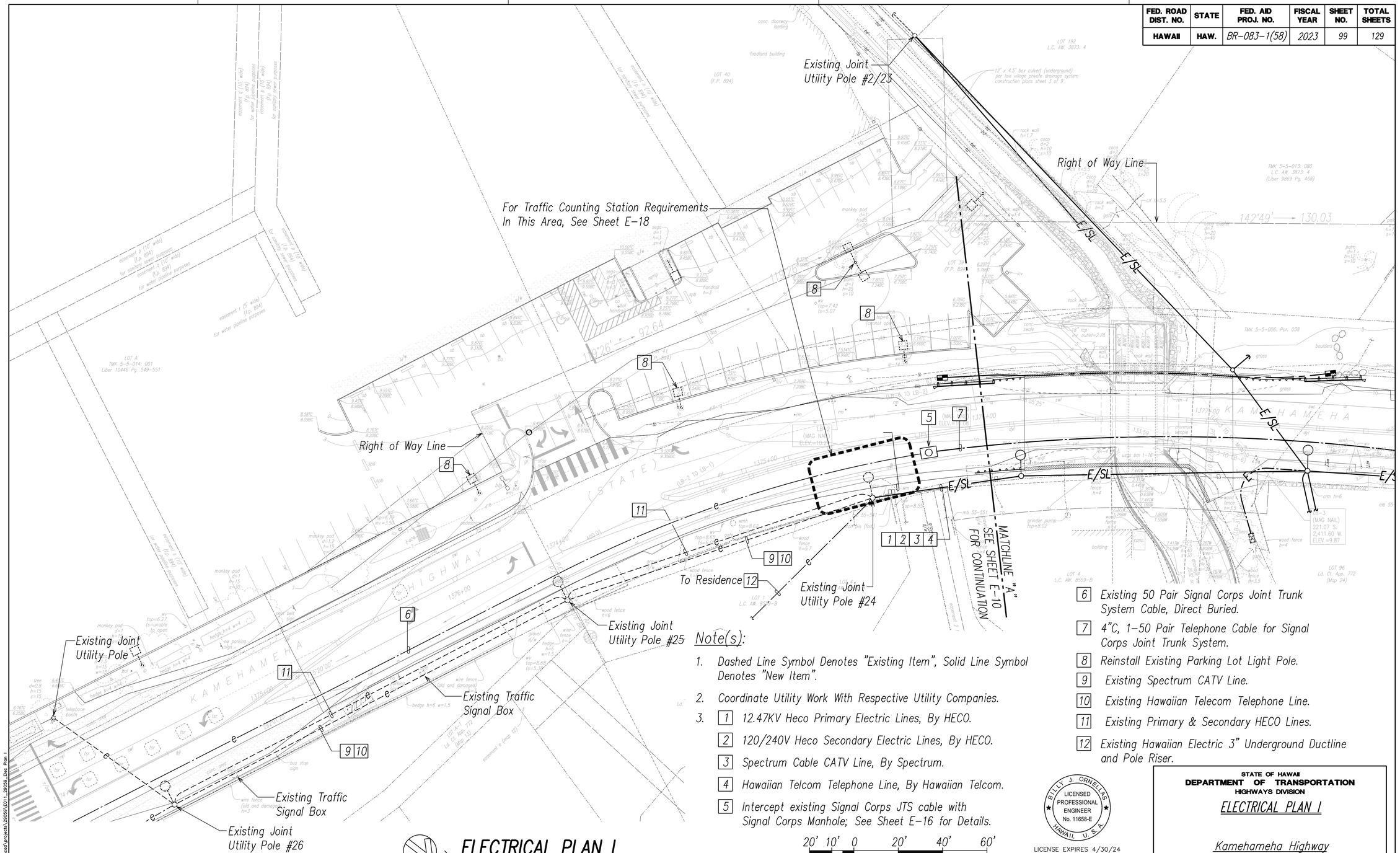

ELECTRICAL PLAN I

SCALE: 1"=20'

Note(s):

1. Dashed Line Symbol Denotes "Existing Item", Solid Line Symbol Denotes "New Item".
2. Coordinate Utility Work With Respective Utility Companies.
3. [1] 12.47KV Heco Primary Electric Lines, By HECO.
   [2] 120/240V Heco Secondary Electric Lines, By HECO.
   [3] Spectrum Cable CATV Line, By Spectrum.
   [4] Hawaiian Telcom Telephone Line, By Hawaiian Telcom.
   [5] Intercept existing Signal Corps JTS cable with Signal Corps Manhole; See Sheet E-16 for Details.
   [6] Existing 50 Pair Signal Corps Joint Trunk System Cable, Direct Buried.
   [7] 4"C, 1-50 Pair Telephone Cable for Signal Corps Joint Trunk System.
   [8] Reinstall Existing Parking Lot Light Pole.
   [9] Existing Spectrum CATV Line.
   [10] Existing Hawaiian Telecom Telephone Line.
   [11] Existing Primary & Secondary HECO Lines.
   [12] Existing Hawaiian Electric 3" Underground Ductline and Pole Riser.

20' 10' 0 20' 40' 60'

SCALE: 1"=20'

GRAPHIC SCALE

BILLY J. ORNELLAS LICENSED PROFESSIONAL ENGINEER No. 11658-E HAWAII, U.S.A.

LICENSE EXPIRES 4/30/24

THIS WORK WAS PREPARED BY ME OR UNDER MY SUPERVISION

STATE OF HAWAII
DEPARTMENT OF TRANSPORTATION
HIGHWAYS DIVISION

ELECTRICAL PLAN I

Kamehameha Highway
Laieloa Stream Bridge Replacement
Federal-Aid Project No. BR-083-1(58)

Scale: AS NOTED Date: September 2023

ORIGINAL PLAN	SURVEY PLOTTED BY	DATE
	DRAWN BY	
	TRACED BY	
NOTE BOOK	DESIGNED BY	
	QUANTITIES BY	
No.	CHECKED BY	

2023-07-28 1:35 PM Z:\Acad\projects\29059\E01_29059_Elec Plan I

FED. ROAD DIST. NO.	STATE	FED. AID PROJ. NO.	FISCAL YEAR	SHEET NO.	TOTAL SHEETS
HAWAII	HAW.	BR-083-1(58)	2023	100	129

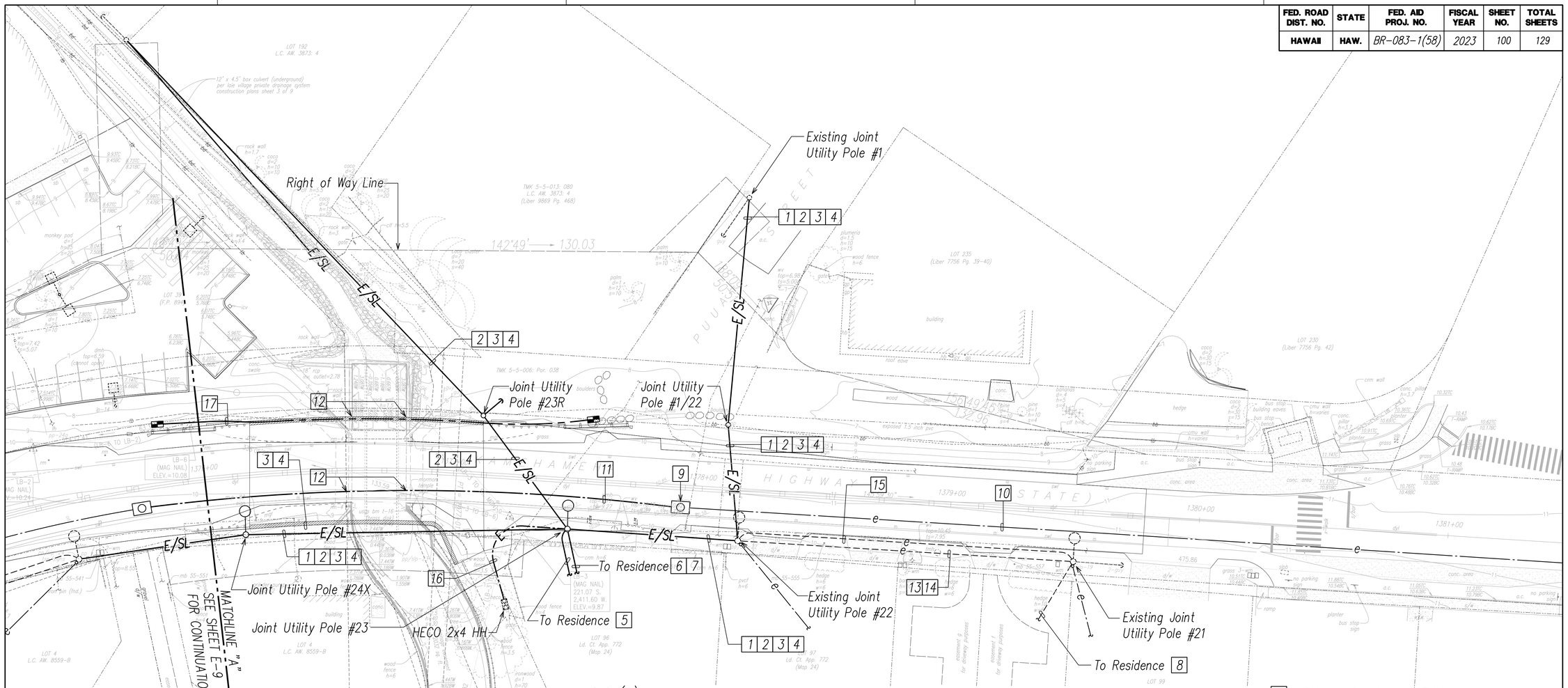

Note(s):

1. Dashed Line Symbol Denotes "Existing Item", Solid Line Symbol Denotes "New Item".
2. Coordinate Utility Work With Respective Utility Companies.
3. 1 12.47KV Heco Primary Electric Lines, By HECO.
   2 120/240V Heco Secondary Electric Lines, By HECO.
   3 Spectrum Cable CATV Line, By Spectrum.
   4 Hawaiian Telcom Telephone Line, By Hawaiian Telcom.
   5 HECO 120/240V Electric Service Drop.
   6 Hawaiian Telcom Telephone Service Drop.
   7 Spectrum CATV Service Drop.
   8 Existing Oceanic CATV Service Drop.
   9 Intercept existing Signal Corps JTS cable with Signal Corps Manhole; See Sheet E-16 for Details.
   10 Existing 50 Pair Signal Corps Joint Trunk System Cable, Direct Buried.
   11 4"C, 1-50 Pair Telephone Cable for Signal Corps Joint Trunk System.
   12 Provide Expansion/Deflection Coupling For Conduit When Transitioning From Roadway To Bridge Deck. See Sheet E-14.
   13 Existing Spectrum CATV Line.
   14 Existing Hawaiian Telecom Telephone Line.
   15 Existing Primary & Secondary HECO Lines.
   16 Hawaiian Electric 3" Underground Ductline. & Pole Riser.
   17 2"C W/ Pullwire for future DOT cables. Route conduit in edge beam of bridge.

NORTH

ELECTRICAL PLAN II

SCALE: 1"=20'

20' 10' 0 20' 40' 60'

SCALE: 1"=20'

GRAPHIC SCALE

BILLY J. ORNELLAS
LICENSED PROFESSIONAL ENGINEER
No. 11658-E
HAWAII, U.S.A.

LICENSE EXPIRES 4/30/24

THIS WORK WAS PREPARED BY ME OR UNDER MY SUPERVISION

STATE OF HAWAII
DEPARTMENT OF TRANSPORTATION
HIGHWAYS DIVISION

ELECTRICAL PLAN II

Kamehameha Highway
Laieloa Stream Bridge Replacement
Federal-Aid Project No. BR-083-1(58)

Scale: AS NOTED Date: September 2023

SHEET No. E-12 OF 22 SHEETS

ORIGINAL PLAN	SURVEY PLOTTED BY	DATE
	DRAWN BY	
	TRACED BY	
NOTE BOOK	DESIGNED BY	
	QUANTITIES BY	
No.	CHECKED BY	

2023-08-01 11:03 AM Z:\Acad\projects\29059\E012_29059_Elec Plan II

FED. ROAD DIST. NO.	STATE	FED. AID PROJ. NO.	FISCAL YEAR	SHEET NO.	TOTAL SHEETS
HAWAII	HAW.	BR-083-1(58)	2023	101	129

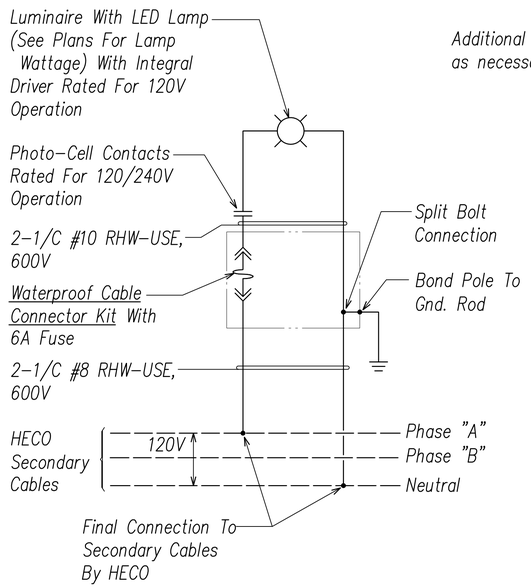

Notes:

1. All Neutral Conductors Shall Be Identified With White Insulation. Other Means Of Identification Is Not Acceptable.
2. All Lamps Shall Meet EPA 1990 Toxic Characteristic Loading Procedure.

A E-13 **ROADWAY LIGHT CONNECTION DIAGRAM**

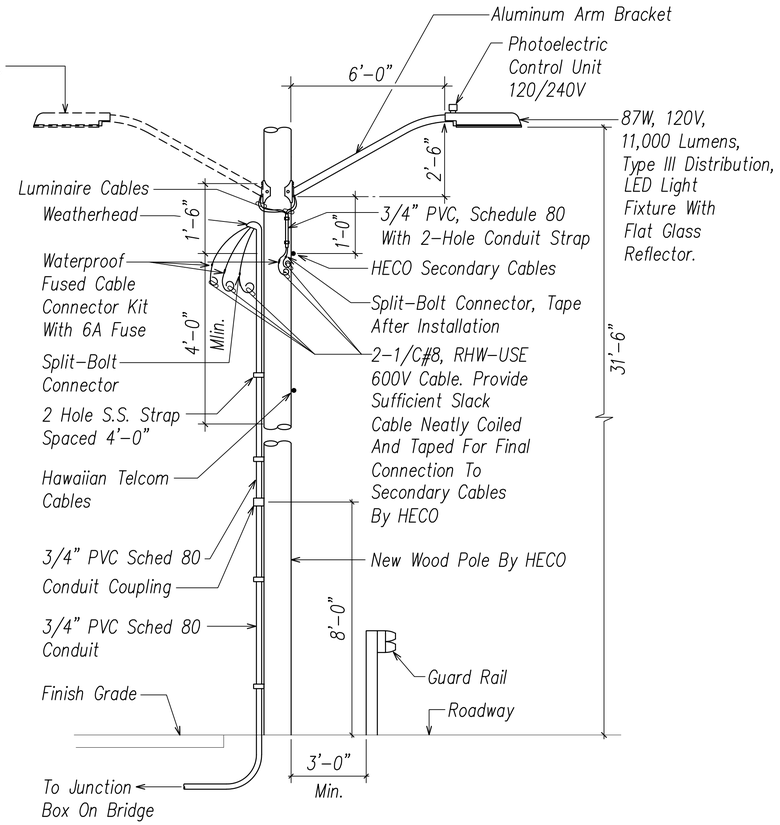

B E-13 **ROADWAY LIGHT ON UTILITY POLE**
NOT TO SCALE

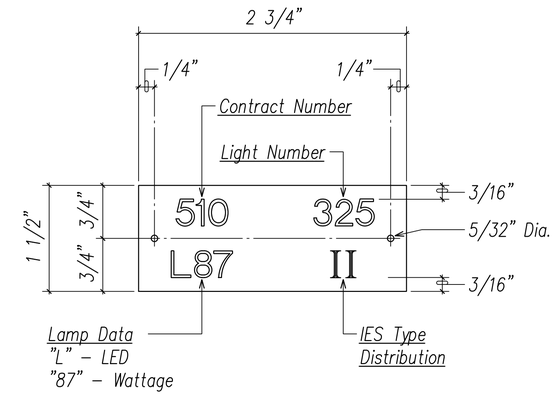

Notes:

1. Use 3 Ply Laminated Flexible Plastic Black-White-Black Thickness: Black Cap & Base Sheet - 0.010", White Middle Sheet - 0.052".
2. Letters And Numbers Shall Be Engraved 1/4" High, 1/16" Stroke, White in Color.
3. Attach to Aluminum Poles with No. 8 Stainless Aluminum, 1/2" Long Drive Screws in 1/8" Drill Hole. Attach to Wood Poles with 4D Aluminum Nails.
4. Letters and Numbers Shall Be Engraved Through "Black Cap Sheet" to Expose "White Letters.

C E-13 **ID TAG DETAIL**
NOT TO SCALE

ROADWAY LIGHTING NOTES:

1. Connection And/or Disconnection of Electric Service To Roadway Lights Shall Be By HECO And Paid For By The Contractor.
2. All Luminaires Shall Be LED Type With Wattage And IES Type Distribution As Indicated.
3. Contractor Shall Stencil The Date Of Installation On The Bottom Of Photocell.
4. Mast Arm, Luminaire, and Pole Count:
   Temporary Lighting: 5 Luminaires, 5 Brackets, 5 Surface Mounted LED Light Fixtures
   Permanent Lighting: 1 Wooden Pole, 1 Luminaire, 1 Bracket.
5. Contractor Shall Maintain One Set Of Approved Plans At The Project Site At All Times During Construction Work.
6. Contractor Shall Arrange With HECO To Energize Roadway Lights A Minimum Of Six Hours For Final Inspection And Acceptance. Contractor Shall Pay For All Testing Costs.
7. Final Acceptance Of The Project Will Be Granted Only After All Work Has Been Completed And The "As-Built" Tracings Have Been Submitted To The State Of Hawaii Department Of Transportation Highways Division.
8. The Contractor Shall Measure And Record The Ground Resistance At Each Standard With No External Ground Wires Connected To The Ground Rod. Contractor Shall Schedule Ground Resistance Measurements 48 Hours In Advance And Shall Not Proceed With Measurements Until Approval Is Granted. Schedules Are Subject To Change Depending Upon Weather Conditions. Reports Shall Include Name Of Personnel Conducting The Test, Meter Type And Serial Number, Date Of Test And Soil Conditions. Test Results Shall Be Certified By The Contractor And Submitted To The Engineering For Acceptance.
9. Contractor Shall Not Backfill Trenches Until Approval Is Granted By The Engineer.
10. All Concrete Work Shall Be Scheduled At Least 24 Hours In Advance. Concrete Shall Not Be Poured Until Approval Is Granted By The Engineer.
11. All Work Shall Be Performed By A Duly Licensed Electrician.
12. Trench Dirt And Material Will Not Be Allowed To Be Stored On Roadway Or Sidewalk.
13. Temporary Trench Patches Shall Match Grade.
14. Submit Shop Drawings For All Roadway Lighting Components Including Luminaires, Lamps, Photocell And Mast Arms, For Approval.
15. All Neutral Conductors Shall Have Solid White Insulation. Any Other Method Of Identification Is Unacceptable.
16. Ensure All Roadway Light Poles, Bracket Arms, And Luminaires Are Grounded Per NEC Article 410.15(B)(5).

APPROVED BY:

HAWAIIAN ELECTRIC COMPANY, INC. DATE

BILLY J. ORNELLAS LICENSED PROFESSIONAL ENGINEER No. 11658-E HAWAII, U.S.A.

LICENSE EXPIRES 4/30/24

THIS WORK WAS PREPARED BY ME OR UNDER MY SUPERVISION

STATE OF HAWAII
DEPARTMENT OF TRANSPORTATION
HIGHWAYS DIVISION

ROADWAY LIGHT ON UTILITY POLE
LIGHT CONNECTION DIAGRAM

Kamehameha Highway
Laielua Stream Bridge Replacement
Federal-Aid Project No. BR-083-1(58)

Scale: AS NOTED Date: September 2023

SHEET No. E-13 OF 22 SHEETS

ORIGINAL PLAN | SURVEY PLOTTED BY | DRAWN BY | TRACED BY | DESIGNED BY | QUANTITIES BY | CHECKED BY | DATE
NOTE BOOK No.

2023-04-06 8:57 AM Z:\Acad\projects\29059\B13_29059_Det01

FED. ROAD DIST. NO.	STATE	FED. AID PROJ. NO.	FISCAL YEAR	SHEET NO.	TOTAL SHEETS
HAWAII	HAW.	BR-083-1(58)	2023	102	129

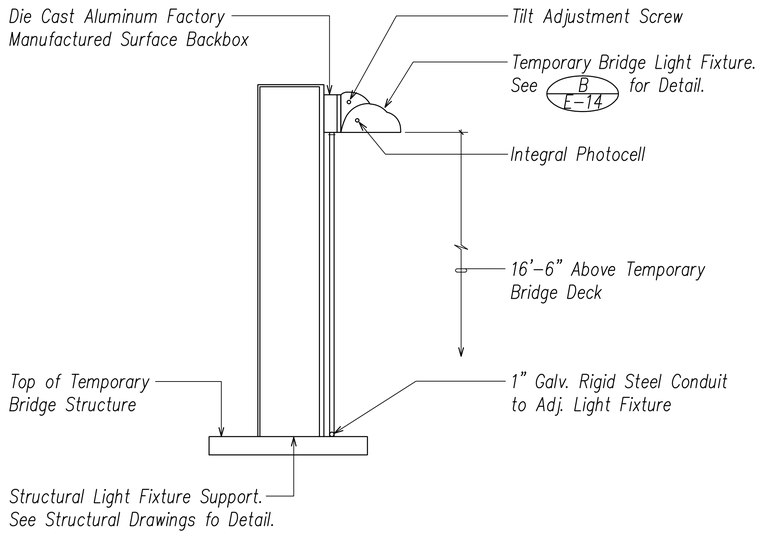

A E-14 TEMPORARY BRIDGE LIGHT FXTURE

NOT TO SCALE

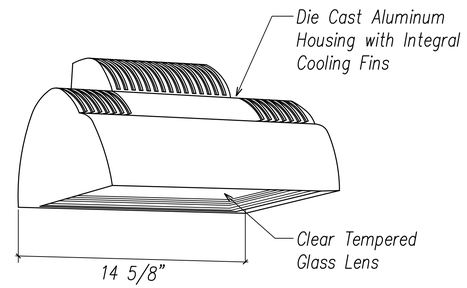

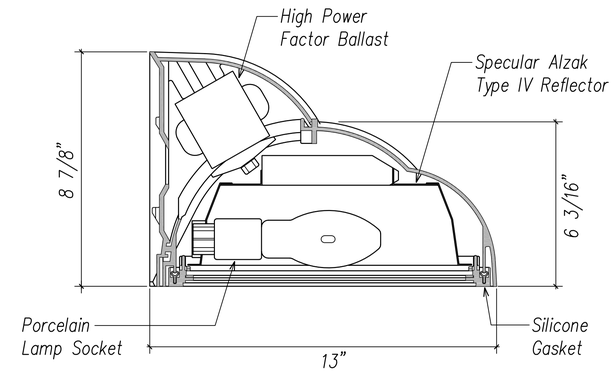

Lamp: 1-65W LED, WD-14.

Luminaire: One-Piece Die Cast Aluminum Housing with Integral Cooling Fins, Die Cast Aluminum Lens Frame with Clear Tempered Glass Lens, Silicone Gasketing, Stainless Steel Hinges and Mounting Hardware, Specular Alzak Reflector, Die Cast Aluminum Surface Mounting Plate, Dark Bronze Polyester Power Coat Paint Finish, 120V High Power Factor Ballast, UL Listed for Wet Locations.

Manufacturer: Kim Lighting WD or Approved Equal.

B E-14 TEMPORARY BRIDGE LIGHT FXTURE DETAIL

NOT TO SCALE

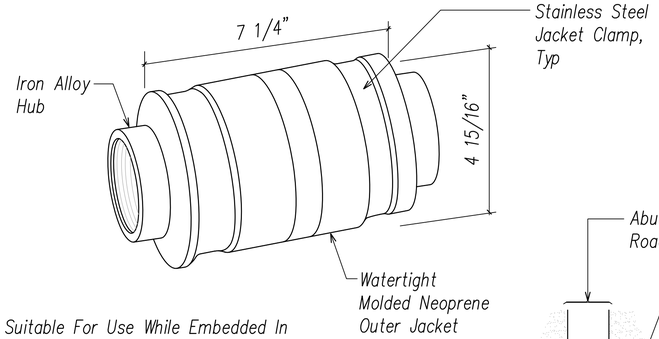

Notes:

1. Coupling Shall Be Suitable For Use While Embedded In Concrete.
2. Coupling Shall Accommodate The Following Range Of Movement Without Collapsing Or Fracturing The Conduit:
   a) Axial Expansion Or Contraction Up To 3/4".
   b) Angular Misalignment Of The Axes Of The Coupled Conduits In Any Direction To 30 Degrees.
   c) Parallel Misalignment Of The Axes Of The Coupled Conduits In Any Direction to 3/4".
3. Provide Adapters For Use Of PVC Conduit As Required.
4. Installation Of Expansion/Deflection Coupling Shall Be Incidental To The Installation Of The Roadway Lighting Conduit.

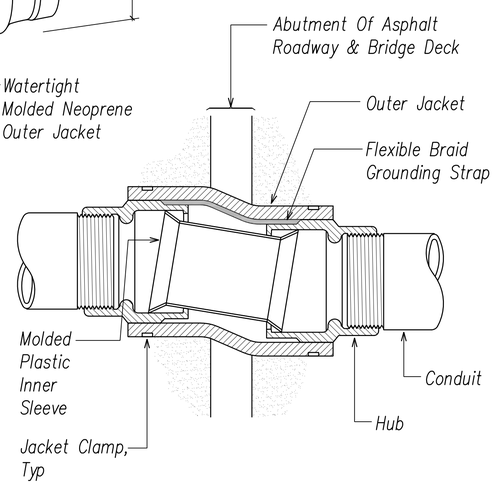

C E-14 TYPICAL EXPANSION/DEFLECTION COUPLING DETAIL

NOT TO SCALE

ORIGINAL PLAN	SURVEY PLOTTED BY	DATE
	DRAWN BY	
	TRACED BY	
NOTE BOOK	DESIGNED BY	
	QUANTITIES BY	
No.	CHECKED BY	

2021-09-27 8:41 AM Z:\Acad\projects\28059\E014_28059.Dwg

BILLY J. ORNELLAS
LICENSED PROFESSIONAL ENGINEER
No. 11658-E
HAWAII, U.S.A.

LICENSE EXPIRES 4/30/24

THIS WORK WAS PREPARED BY ME OR UNDER MY SUPERVISION

STATE OF HAWAII
DEPARTMENT OF TRANSPORTATION
HIGHWAYS DIVISION

TEMPORARY BRIDGE LIGHTING DETAILS

Kamehameha Highway
Laieloa Stream Bridge Replacement
Federal-Aid Project No. BR-083-1(58)

Scale: AS NOTED Date: September 2023

SHEET No. E-14 OF 22 SHEETS

FED. ROAD DIST. NO.	STATE	FED. AID PROJ. NO.	FISCAL YEAR	SHEET NO.	TOTAL SHEETS
HAWAII	HAW.	BR-083-1(58)	2023	103	129

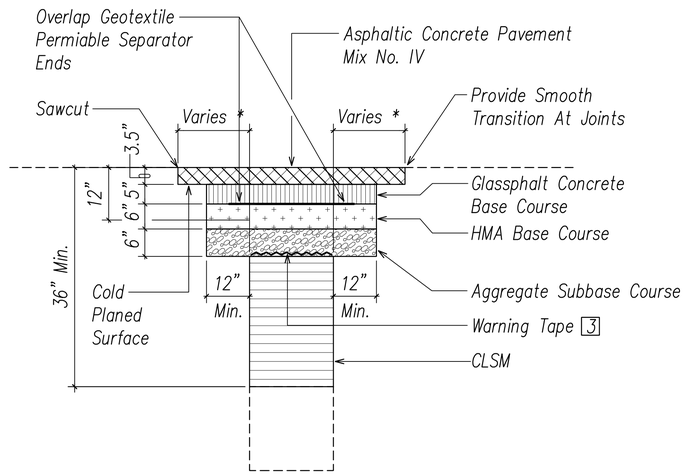

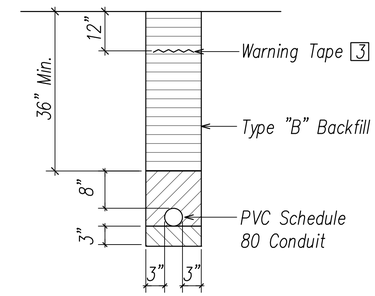

SECTION C

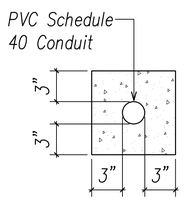

1 2 SECTION A

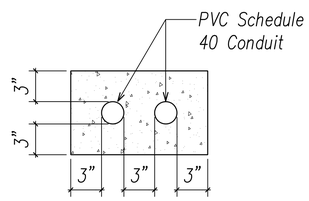

1 2 SECTION B

Notes:

1. Tack Coat Exst Asphalt Bound Material Faces Prior To Filling Excavation With Asphalt Bound Material.

2. When Ground Water Is Encountered In Trenches, Backfill With Gravel Conforming To ASTM C-33, Size 67 Material Until One Foot Above Water Level. Encapsulate The Size 67 Material With A Permeable Separator That Lines The Bottom And Sides Of The Trench And Overlaps At The Top Of The Material For The Width Of The Trench. Complete Backfilling The Trench Per Detail.

* Note

1. If Trench Aligned Transverse To Direction Of Travel, 1 Foot On Each Side Of Trench.

2. Smoothness Of Paved Surfaces: The Distance From The Paved Surface To The Testing Edge Of A Ten-foot Straight Edge Between Two Points Of Contact Shall Not Exceed 3/16".

STATE RIGHT-OF-WAY BACKFILL NOTES

Trench Backfill Material "B"
1. Sand Equivalent ≥ 2
2. 8" Max. Lift Loose
3. 95% Compaction

Trench Backfill Material "A"
1. Sand Equivalent ≥ 20
2. 8" Max. Lift Loose
3. 95% Compaction

If Material Below Duct Is Not Equivalent To Backfill Material "A", Excavate Material & Provide 3" Backfill Material "A", See Above

Concrete - 3" Encasement, 2500 PSI Compressive Strength @ 28 Days.

Notes:

1 Base Course & Sub-Base Course Per 2005 State Standard Specifications For Highway Construction.

2 Sawcutting & Repairing Of Exst A.C. Pavement Shall Not Be Paid For Seperately, But Considered Incidental To The Various Contract Items.

3 The Metal Detectable Reel Warning Tape Shall Be A Minimum Of 4 Mils Thick And 6" Wide With Integral Wires, Foil Backing, Minimum Strength 1,750 Psi Length-Wise And 1,500 Psi Crosswise With A Continuous Metallic Backing And Corrosion Resistant 1± Mil Thick Foil Core. Tape Shall Be Red In Color For Electrical Ductlines And Shall Be Detectable By Metal Detector When Buried Up To 3'-0" Deep. The Message On The Tape Shall Read, "caution-state Highway Lighting Buried Below", Utility 2" Series "c" Black Lettering. The Message Shall Be Repeated With A 36" Spacing. Warning Tape For Signal Corps Conduits Shall Be Per Signal Corps Standards. Per Signal Corps Standards. Warning Tape For Heco Shall Bear A Continuous Printed Inscription Indicating The Presence Of High Voltage Electrical Underground Cables And Bear The Inscription Of "heco" If Buried Within The State Highway Right-of-way.

DUCT SECTION DETAILS
NOT TO SCALE

BILLY J. ORNELLAS
LICENSED PROFESSIONAL ENGINEER
No. 11658-E
HAWAII, U.S.A.

LICENSE EXPIRES 4/30/24

THIS WORK WAS PREPARED BY ME OR UNDER MY SUPERVISION

STATE OF HAWAII
DEPARTMENT OF TRANSPORTATION
HIGHWAYS DIVISION

DUCT SECTION DETAILS

Kamehameha Highway
Laielua Stream Bridge Replacement
Federal-Aid Project No. BR-083-1(58)

Scale: AS NOTED Date: September 2023

SHEET No. E-15 OF 22 SHEETS

ORIGINAL PLAN | SURVEY PLOTTED BY | DRAWN BY | TRACED BY | DESIGNED BY | QUANTITIES BY | CHECKED BY | DATE
NOTE BOOK No.

2023-08-01 11:44 AM Z:\Acad\projects\29059\015_29059_Dut01

FED. ROAD DIST. NO.	STATE	FED. AID PROJ. NO.	FISCAL YEAR	SHEET NO.	TOTAL SHEETS
HAWAII	HAW.	BR-083-1(58)	2023	104	129

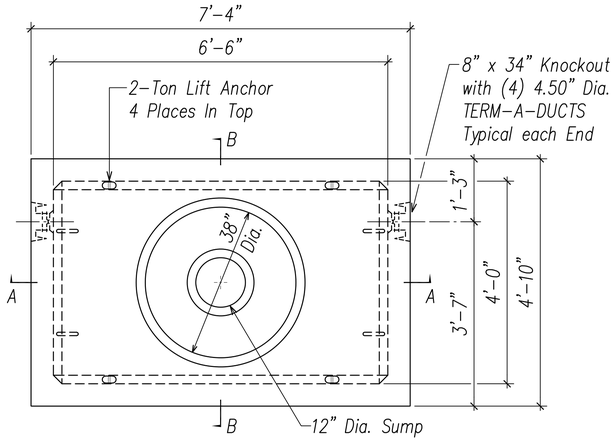

PLAN VIEW

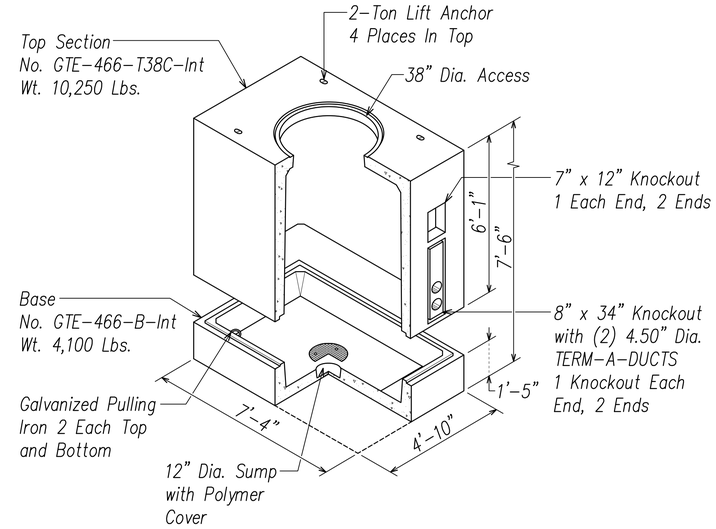

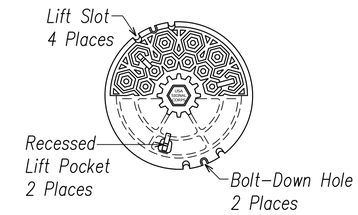

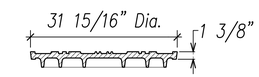

CAST IRON COVER
Suitable For Use In Traffic Areas
325 Lbs.

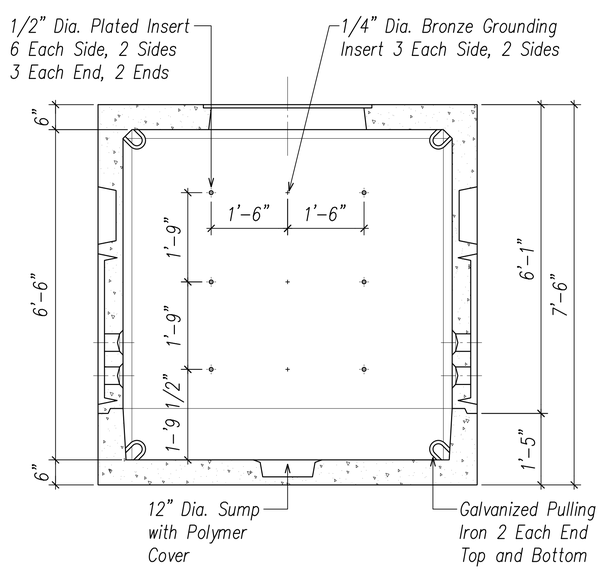

SECTION AA

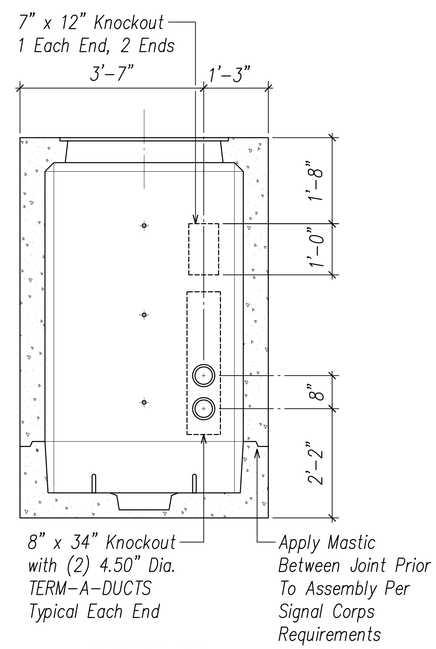

SECTION BB

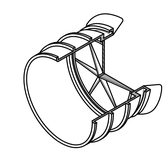

ISOMETRIC VIEW
OF TERM-A-DUCT

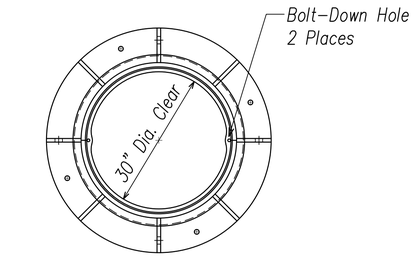

FRAME PLAN

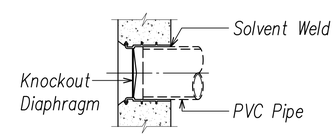

TYPICAL INSTALLATION
OF TERM-A-DUCT
Watertight Duct Connection
For Underground Utility Conduit

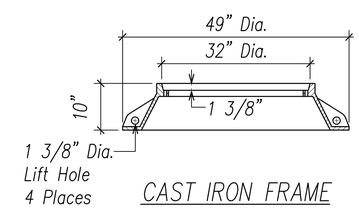

CAST IRON FRAME
No. B-30
465 Lbs.

Note: Provide Cable Racks Per Signal Corps Requirements.

A
E-16

SIGNAL CORPS MANHOLE DETAILS

NOT TO SCALE

ORIGINAL PLAN	SURVEY PLOTTED BY	DATE
	DRAWN BY	"
	TRACED BY	"
NOTE BOOK	DESIGNED BY	"
	QUANTITIES BY	"
No.	CHECKED BY	"

2021-09-27 8:44 AM Z:\Acad\projects\28059\E016_28059 MH-Details01

BILLY J. ORNELLAS
LICENSED PROFESSIONAL ENGINEER
No. 11658-E
HAWAII, U.S.A.

LICENSE EXPIRES 4/30/24

THIS WORK WAS PREPARED BY ME OR UNDER MY SUPERVISION

STATE OF HAWAII
DEPARTMENT OF TRANSPORTATION
HIGHWAYS DIVISION

SIGNAL CORPS
MANHOLE DETAILS

Kamehameha Highway
Laieloa Stream Bridge Replacement
Federal-Aid Project No. BR-083-1(58)

Scale: AS NOTED Date: September 2023

SHEET No. E-16 OF 22 SHEETS

FED. ROAD DIST. NO.	STATE	FED. AID PROJ. NO.	FISCAL YEAR	SHEET NO.	TOTAL SHEETS
HAWAII	HAW.	BR-083-1(58)	2023	105	129

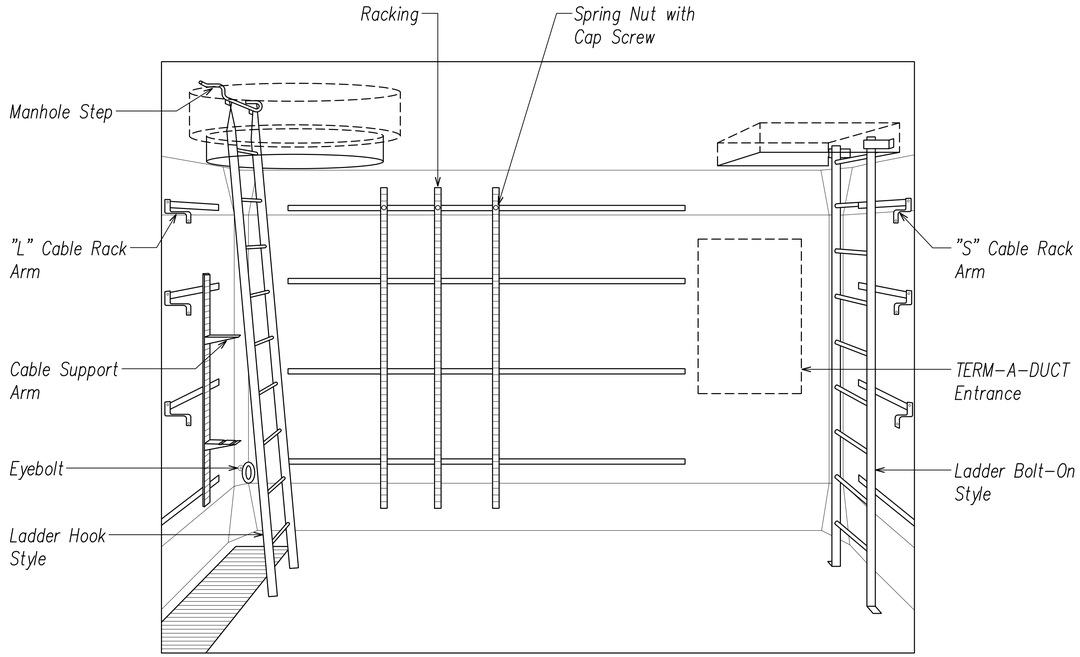

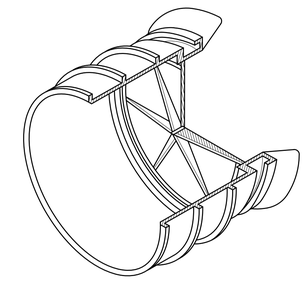

ISOMETRIC VIEW
OF TERM-A-DUCT

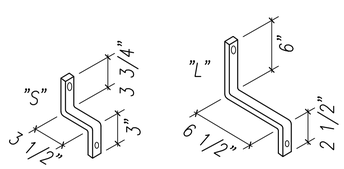

CABLE RACK BRACKETS
1" x 1/2" Steel, Hot Dipped Galvanized, with Mounting Hole/Slot for 1/2" Bolts

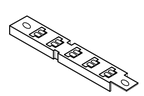

RACKING WITH TAB
Mounting Slots at Each End Interlock so that Racks may be Combined.
21" and 27" Lengths

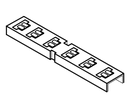

CUT RACKING
Lengths:
10 Hole – 15"
20 Hole – 30"
37 Hole – 55 1/2"
44 Hole – 66"
47 Hole – 70 1/2"
51 Hole – 76 1/2"
65 Hole – 97 1/2"

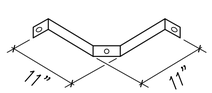

CORNER BRACKET
1/4" x 1 1/2" Flatbar Galvanized

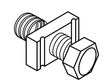

STRING NUT AND CAP SCREW
1/2" Nut, 1/2" x 1 1/4" Plated Cap Screw

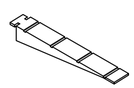

CABLE SUPPORT ARMS
Formed from a 3/16" Steel Hot-Dipped Galvanized.
Lengths:
4"–7 1/2"–10"–14"–18"

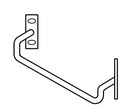

MANHOLE STEP BOLT-ON
3/4" Rebar, 16" Wide Galvanized

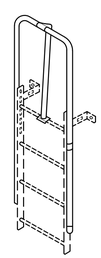

OPTIONAL PULL-UP EXTENDER
1 1/2" Dia. Aluminum Tubing Extends 28" Above Top Rung on Ladder

EYEBOLT
3/4", 1" or 1 1/4"

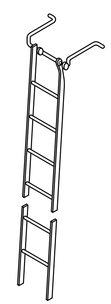

MANHOLE STEP
3/4" Rebar, 16" Wide Galvanized

HOOK LADDER
3/4" Dia. Rungs on 12" Centers. Side Rails are 1 1/2" x 3/8" Flatbar (2 1/2" x 3/8" When Ladder Length is Over 12") Spacing @ 12" Hot-Dipped Galvanized

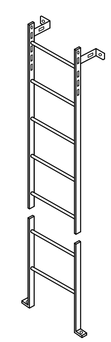

BOLT-ON LADDER
3/4" Dia. (#6 Rebar) Rungs on 12" Center. Side Rails are 2" x 5/16" Flatbar 2 Mounting Brackets Furnished Hot-Dipped Galvanized

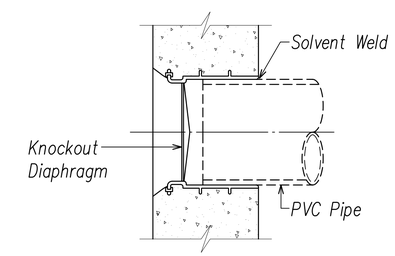

TYPICAL INSTALLATION
OF TERM-A-DUCT
Watertight Duct Connection
For Underground Utility Conduit

A
E-17

SIGNAL CORPS MANHOLE DETAILS

NOT TO SCALE

ORIGINAL PLAN	SURVEY PLOTTED BY	DATE
	DRAWN BY	
NOTE BOOK	TRACED BY	
	DESIGNED BY	
	QUANTITIES BY	
No.	CHECKED BY	

2021-09-27 8:44 AM Z:\Acad\projects\29059\017_29059 MH-Details02

BILLY J. ORNELLAS
LICENSED PROFESSIONAL ENGINEER
No. 11658-E
HAWAII, U.S.A.

LICENSE EXPIRES 4/30/24

THIS WORK WAS PREPARED BY ME OR UNDER MY SUPERVISION

STATE OF HAWAII
DEPARTMENT OF TRANSPORTATION
HIGHWAYS DIVISION

SIGNAL CORPS
MANHOLE DETAILS

Kamehameha Highway
Laielua Stream Bridge Replacement
Federal-Aid Project No. BR-083-1(58)

Scale: AS NOTED Date: September 2023

SHEET No. E-17 OF 22 SHEETS

FED. ROAD DIST. NO.	STATE	FED. AID PROJ. NO.	FISCAL YEAR	SHEET NO.	TOTAL SHEETS
HAWAII	HAW.	BR-083-1(58)	2023	106	129

GENERAL NOTES

1. The locations of new inductance loops, piezo sensors, pullboxes and cabinets/junction boxes shall be staked out in the field by the Contractor and approved by the Engineer prior to installation.

2. The Contractor shall inform the Engineer at least three days prior to saw-cutting pavement and installing inductance loops.

3. Continuity of inductance loops, piezo sensors, and lead-in wires shall be tested and warranted by the Contractor for one year from date of acceptance.

4. The Contractor shall restore all affected areas to their original condition. This item of work shall not be paid for separately, but shall be considered incidental to work of other paid items.

5. The Contractor shall verify the locations of the existing utilities and underground structures whether or not shown on plans.

6. The Contractor shall assume that existing underground utilities not shown on the plans may exist, therefore, he shall contact the utility companies for information and toning.

7. The Contractor shall be held liable for any damages incurred to the existing utilities and under ground structures as a result of his operation. All damaged portions shall be replaced in accordance with the Standards and Specifications of the affected utility company at no cost to the STATE.

8. Changes to the contract plans and specifications shall not be permitted, unless otherwise authorized by the Engineer, upon written justification and request for approval by the Contractor.

9. Highway crossing sleeve shall be provided with 36" cover.

GENERAL NOTES

1. Detector loop shall consist of four (4) turns of 1/c #12 meeting IMSA SPEC 51-5 or equivalent embedded in a 3/8" minimum sawcut, except as noted.

2. Loop and lead-in to the first pullbox shall be one continuous wire. Lead-in wires from the same loop shall be twisted in pairs, two turns per foot. DO NOT twist one loop-pairs with another loop-pairs.

3. All lead-in wires shall be crimped with open end lugs that will fit into the terminal board slots snugly.

4. Stagger traffic loops on roadway less than 12 foot lane width.

5. The Contractor shall connect the inductance wires on each terminal slot.

6. Vacuum and clean sawcut thoroughly before installing sensors and/or cables and filling with hot tar or epoxy sealant.

7. All loop lead-in wires in all enclosures including pullboxes shall be identified and labeled by direction of traffic flow and lane numbers as shown on plans.

8. All cables and wires terminated within an enclosure shall have a minimum 12" additional slack.

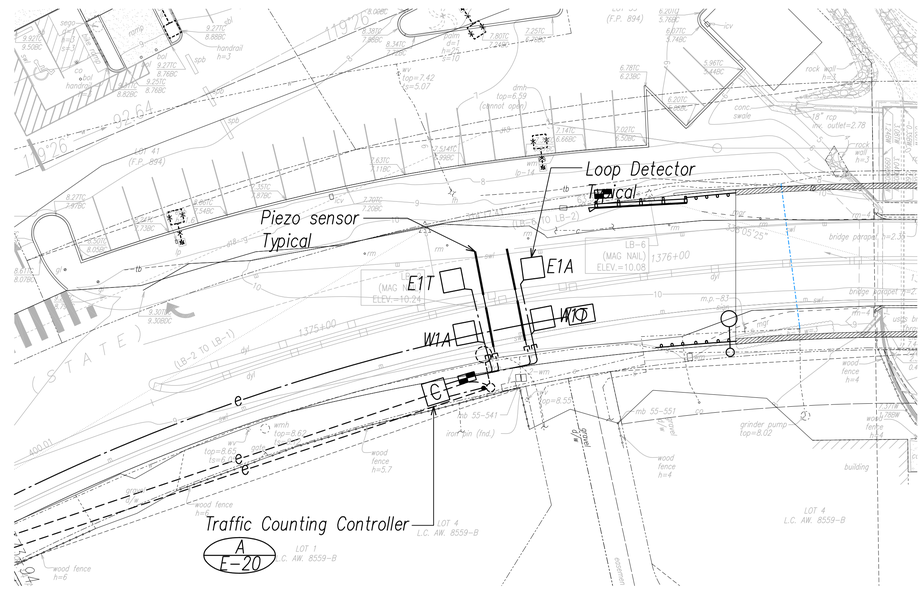

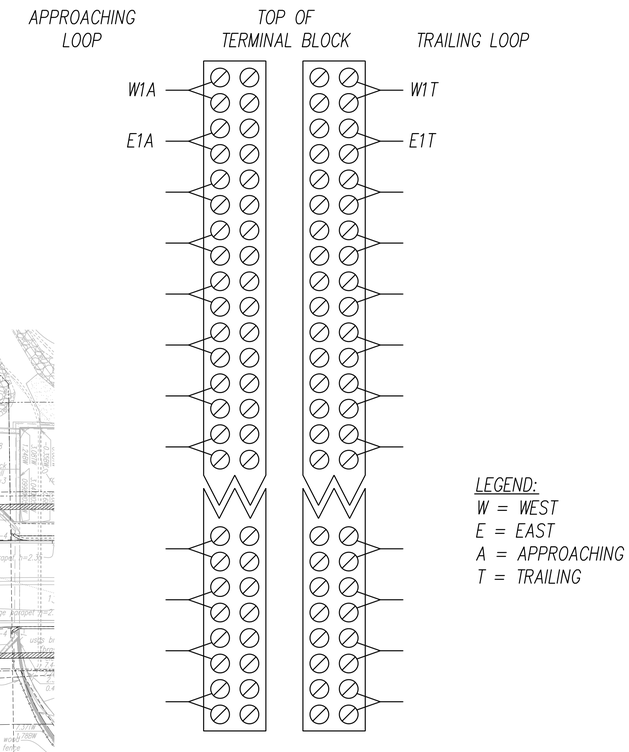

CONNECTING LAYOUT OF LOOP LEAD-IN WIRES TO TERMINAL BLOCK INSIDE M332A CABINET

NORTH

TRAFFIC COUNTING STATION PLAN 1375+50

SCALE: 1"=20'

20' 10' 0 20' 40' 60'

SCALE: 1"=20'

GRAPHIC SCALE

BILLY J. ORNELLAS
LICENSED PROFESSIONAL ENGINEER
No. 11658-E
HAWAII, U.S.A.

LICENSE EXPIRES 4/30/24

THIS WORK WAS PREPARED BY ME OR UNDER MY SUPERVISION

STATE OF HAWAII
DEPARTMENT OF TRANSPORTATION
HIGHWAYS DIVISION

TRAFFIC COUNTING STATION PLAN

Kamehameha Highway
Laieloa Stream Bridge Replacement
Federal-Aid Project No. BR-083-1(58)

Scale: AS NOTED Date: September 2023

SHEET No. E-18 OF 22 SHEETS

ORIGINAL PLAN | SURVEY PLOTTED BY | DRAWN BY | TRACED BY | DESIGNED BY | QUANTITIES BY | CHECKED BY | DATE
NOTE BOOK No.

2021-09-27 8:44 AM Z:\Acad\projects\29059\E018_29059_Details01

FED. ROAD DIST. NO.	STATE	FED. AID PROJ. NO.	FISCAL YEAR	SHEET NO.	TOTAL SHEETS
HAWAII	HAW.	BR-083-1(58)	2023	107	129

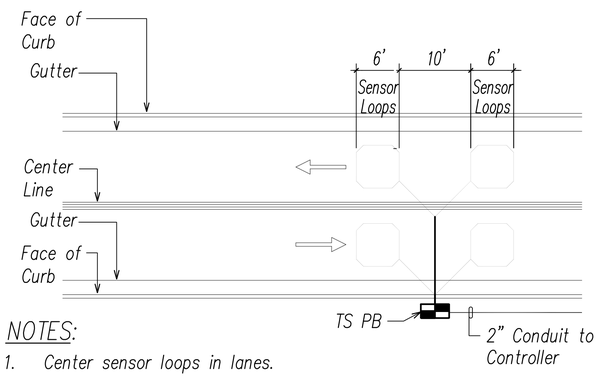

NOTES:

1. Center sensor loops in lanes.
2. Collector cables shall be twisted 2 turns per 12".
3. Number of loops and locations vary. See project plans.
4. Number and locations of collector sawcuts may be varied in the field to suit.

TYPICAL SENSOR LOOP LAYOUT

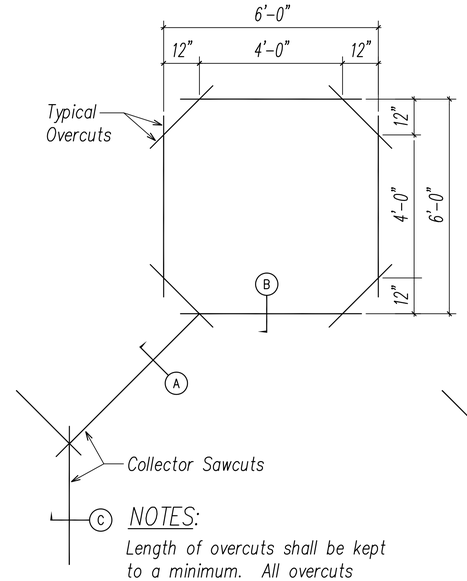

NOTES:

Length of overcuts shall be kept to a minimum. All overcuts shall be backfilled with hot tar.

TYPICAL SENSOR LOOP SAWCUT DETAIL

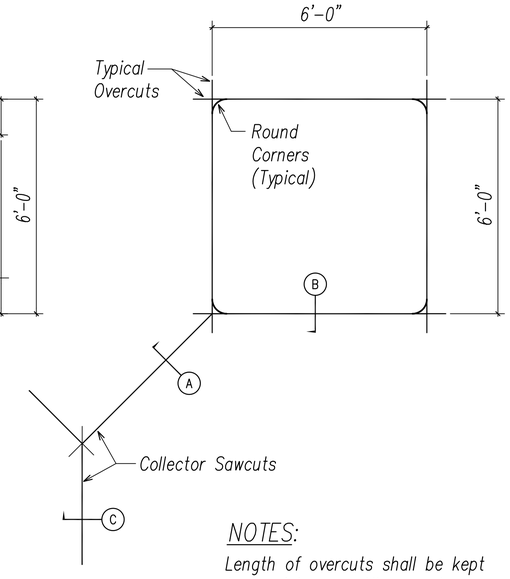

NOTES:

Length of overcuts shall be kept to a minimum. All overcuts shall be backfilled with hot tar.

ALTERNATE SENSOR LOOP SAWCUT DETAIL

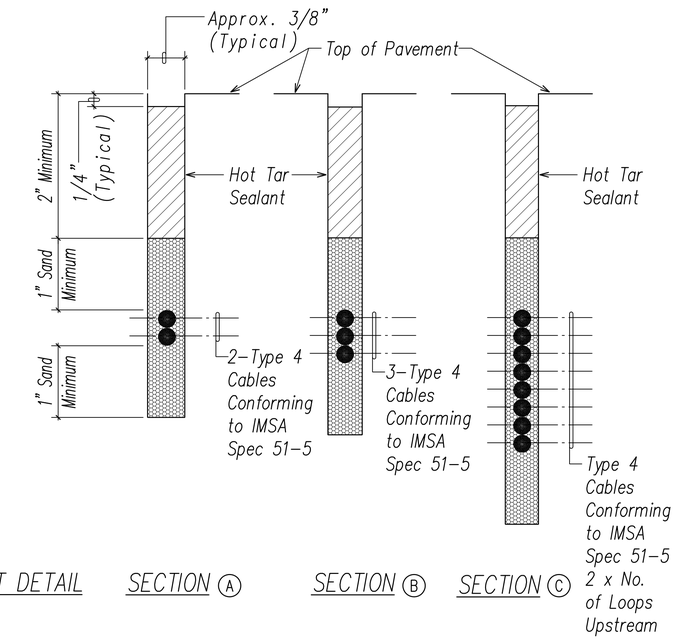

SECTION (A) SECTION (B) SECTION (C)

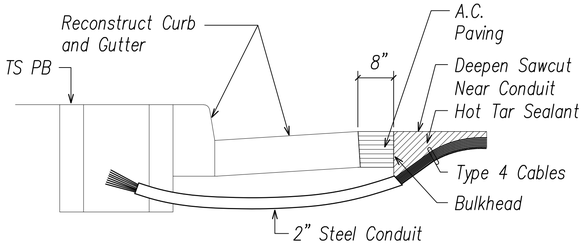

NOTES ON CONSTRUCTION AT END OF SAWCUT

1. Seal roadway end of conduit after installation of conductors.
2. Install bulkhead across conduit trench.
3. Place hot tar in sawcut.
4. Backfill over conduit with new A.C.
5. Reconstruct curb and gutter as required.

DETAIL OF SENSOR LOOP INSTALLATION AT EDGE OF ROADWAY

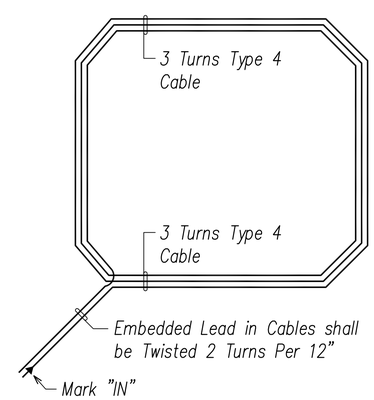

PLAN

TYPICAL SENSOR LOOP WIRING DIAGRAM

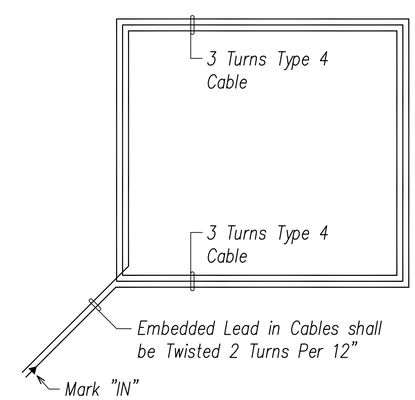

PLAN

ALTERNATE SENSOR LOOP WIRING DIAGRAM

BILLY J. ORNELLAS
LICENSED PROFESSIONAL ENGINEER
No. 11658-E
HAWAII, U.S.A.

LICENSE EXPIRES 4/30/24

THIS WORK WAS PREPARED BY ME OR UNDER MY SUPERVISION

A
E-19
DETECTOR LOOP DETAILS
Not To Scale

STATE OF HAWAII
DEPARTMENT OF TRANSPORTATION
HIGHWAYS DIVISION

LOOP DETECTOR DETAILS

Kamehameha Highway
Laieloa Stream Bridge Replacement
Federal-Aid Project No. BR-083-1(58)

Scale: AS NOTED Date: September 2023

SHEET No. E-19 OF 22 SHEETS

ORIGINAL PLAN | SURVEY PLOTTED BY | DRAWN BY | TRACED BY | DESIGNED BY | QUANTITIES BY | CHECKED BY | DATE
NOTE BOOK No.

2021-09-27 8:47 AM Z:\Acad\projects\29059\G019_29059 Details02

FED. ROAD DIST. NO.	STATE	FED. AID PROJ. NO.	FISCAL YEAR	SHEET NO.	TOTAL SHEETS
HAWAII	HAW.	BR-083-1(58)	2023	108	129

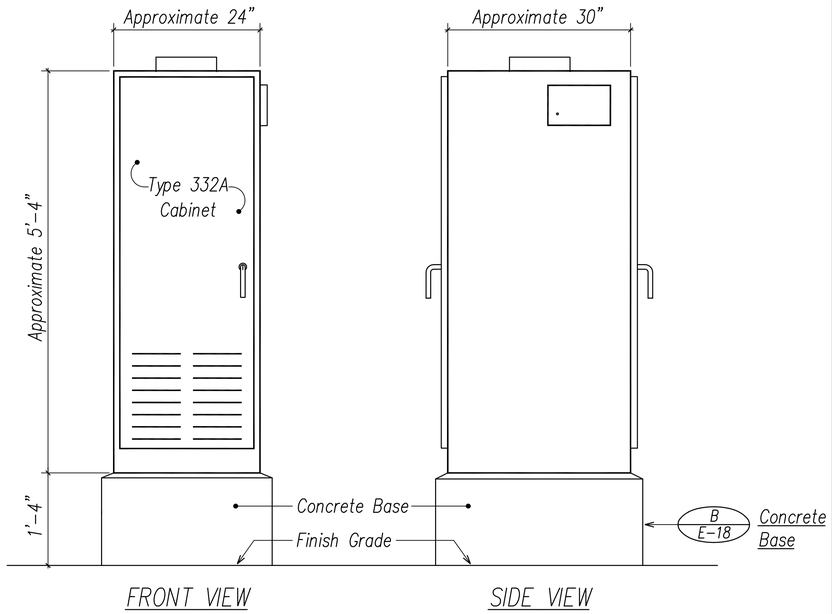

A
E-20
TYPE 332A TRAFFIC CONTROLLER
Not to Scale

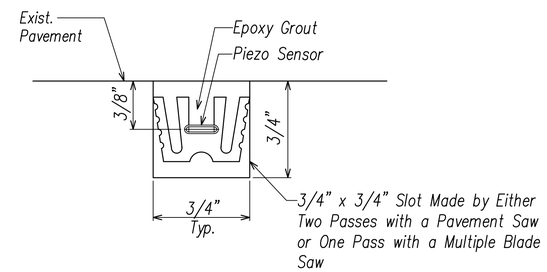

C
E-20
WIM PIEZO SENSOR DETAIL
NOT TO SCALE

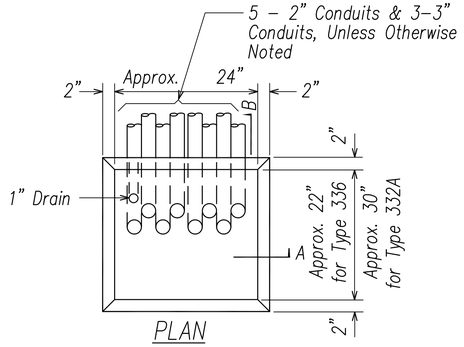

NOTES:

1. Concrete shall be Class "B".
2. Dimensions shall be altered to suit controller cabinet actually furnished.
3. Conduit bends and drain are incidental to concrete base.
4. Refer to Cabinet Manufacturer's Specifications for details of anchor bolts and base setting.
5. All exposed surfaces of concrete base shall be given a Class 2, rubbed finish.

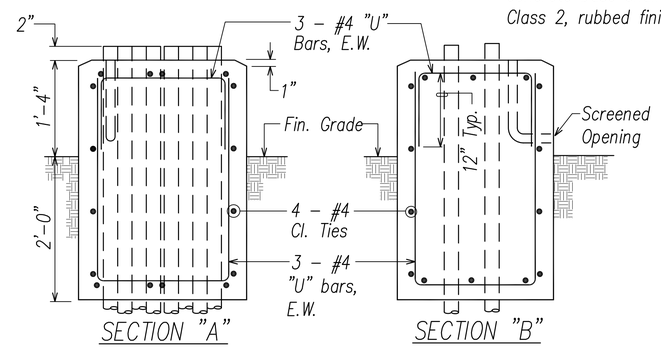

B
E-20
TYPE "D" CONCRETE BASE CONTROLLER CABINET
Not To Scale

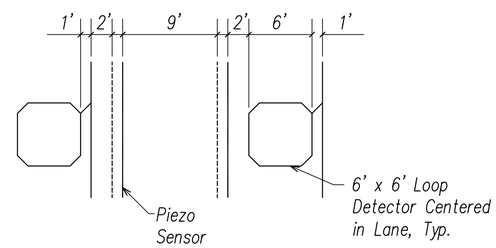

Notes:

1. The Contractor shall submit layout of loop detectors and piezo sensors for approval by the Engineer.
2. The Contractor shall lay out the loop detectors so that the cutting of the pavement will not cut the existing dowels.

D
E-20
TYPICAL WEIGH-IN-MOTION SYSTEM LAYOUT
NOT TO SCALE

ORIGINAL PLAN	SURVEY PLOTTED BY	DATE
	DRAWN BY	"
	TRACED BY	"
NOTE BOOK	DESIGNED BY	"
	QUANTITIES BY	"
No.	CHECKED BY	"

LAST SAVE: 09/17/14 @ 12:18:59 BY: AD PLOT SC: 1"=0"=1"
2021-09-27 8:47 AM Z:\Acad\projects\29059\E020_29059 Details03

BILLY J. ORNELLAS
LICENSED PROFESSIONAL ENGINEER
No. 11658-E
HAWAII, U.S.A.

LICENSE EXPIRES 4/30/24

THIS WORK WAS PREPARED BY ME OR UNDER MY SUPERVISION

STATE OF HAWAII
DEPARTMENT OF TRANSPORTATION
HIGHWAYS DIVISION

MISCELLANEOUS TRAFFIC SIGNAL DETAILS

Kamehameha Highway
Laieloa Stream Bridge Replacement
Federal-Aid Project No. BR-083-1(58)

Scale: AS NOTED Date: September 2023

SHEET No. E-20 OF 22 SHEETS

FED. ROAD DIST. NO.	STATE	FED. AID PROJ. NO.	FISCAL YEAR	SHEET NO.	TOTAL SHEETS
HAWAII	HAW.	BR-083-1(58)	2023	109	129

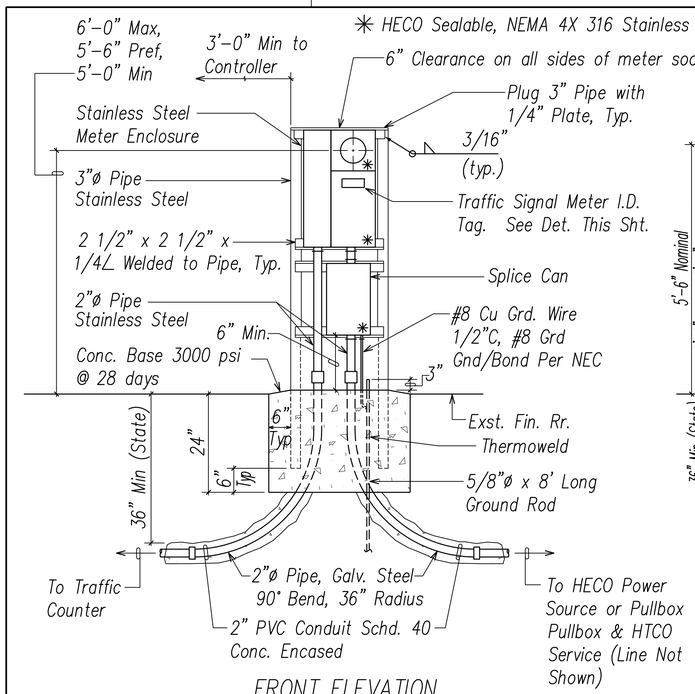

FRONT ELEVATION

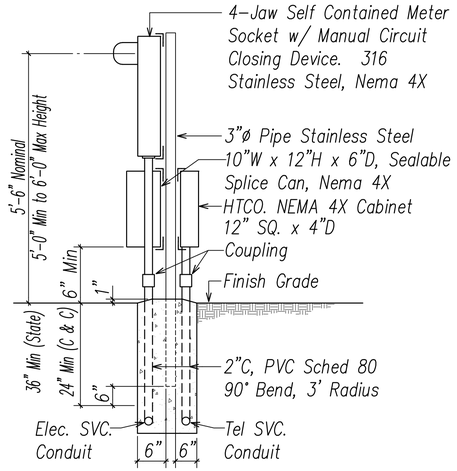

SIDE ELEVATION

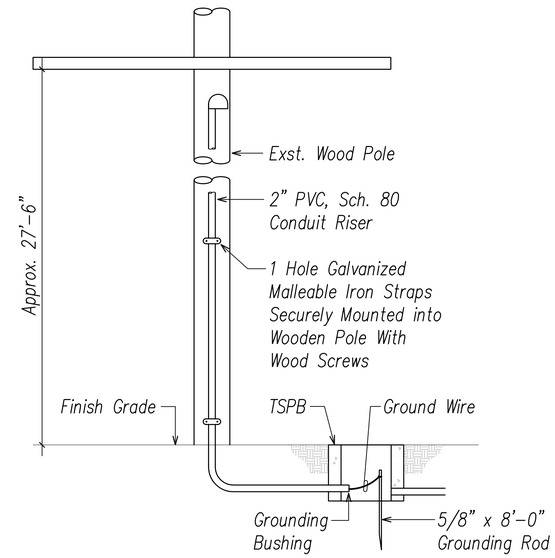

SERVICE RISER AT EXISTING WOOD POLE

Not To Scale

NOTES:

1. Contractor Shall Make All Electrical Connection to Counter, Provide 2P50A Breaker, Ground and 2" Conduit.
2. All Conduits to Contain a Polyolefin Pull Line. (Jet Line Cat #232 or Equiv)
3. Pedestal Shall Be Stainless Steel.
4. All Fastening Bolts, Nuts & Washers Shall Be Stainless Steel. Provide One Coat ShopPrimer & Two Coats of Acrylic Enamel Finish.
5. Provide 4 Ft Clearance in Front of Meter.

A / E-21 METER PEDESTAL FOR UNDERGROUND SERVICE

Not To Scale

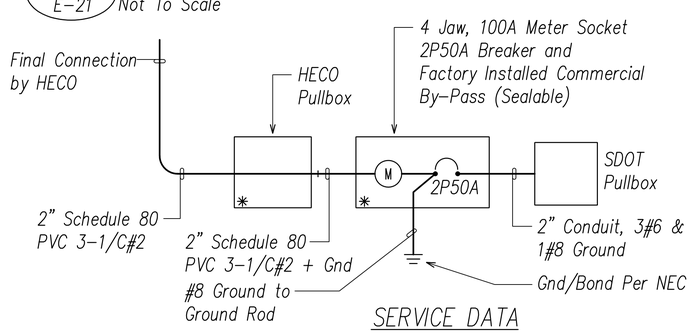

SERVICE DATA

1. Service Voltage: 1 Phase 3 Wire 120/240V
2. Load Data: Connected – 5 KVA Estimated Demand – 2 KVA

✳ HECO Sealable, NEMA 3R

ONE-LINE DIAGRAM

Not To Scale

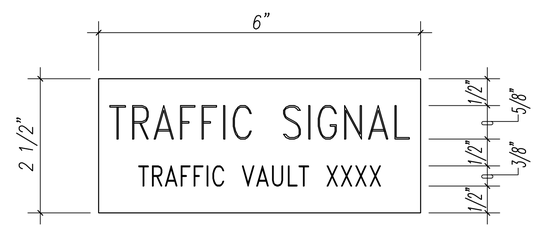

NOTES:

1. Use 3-Ply Laminated Flexible Plastic, Black-White-Black Thickness: Black Cap Sheet – 0.010", White Base Sheet – 0.052", Black Base Sheet – 0.010".
2. Attach to Meter Box Using Scotch 3M Brand Very High Bond (VHB) Double Coated Acrylic Foam Tape or Equivalent.
3. Letters/Numbers Shall Be 1/16" Stroke, (White in Color).
4. Letters/Numbers Shall Be Inscribed By Cutting Through "Black Cap Sheet" to Expose White Letters/Numbers.

METER I.D. TAG DETAIL

Not To Scale

BILLY J. ORNELLAS LICENSED PROFESSIONAL ENGINEER No. 11658-E HAWAII, U.S.A.

LICENSE EXPIRES 4/30/24

THIS WORK WAS PREPARED BY ME OR UNDER MY SUPERVISION

STATE OF HAWAII
DEPARTMENT OF TRANSPORTATION
HIGHWAYS DIVISION

HECO AND HTCO SERVICE DETAILS

Kamehameha Highway
Laieloa Stream Bridge Replacement
Federal-Aid Project No. BR-083-1(58)

Scale: AS NOTED Date: September 2023

SHEET No. E-21 OF 22 SHEETS

109

ORIGINAL PLAN | SURVEY PLOTTED BY | DRAWN BY | TRACED BY | DESIGNED BY | QUANTITIES BY | CHECKED BY | DATE
NOTE BOOK No.

2021-09-27 8:47 AM Z:\Acad\projects\29059\G21_29059_Details04

FED. ROAD DIST. NO.	STATE	FED. AID PROJ. NO.	FISCAL YEAR	SHEET NO.	TOTAL SHEETS
HAWAII	HAW.	BR-083-1(58)	2023	110	129

All Dimensions are in Millimeters unless Otherwise shown.

General Notes:

1. Provide a minimum of one 16 ø x 2.5m Copperweld Ground Rod in each pullbox. When directed by the Traffic Signal Inspector/Engineer, install additional Ground Rods. Cost of Ground Rods shall be incidental to the pullboxes.
2. All pre-cast concrete pullboxes shall be manufactured in two pieces.
3. The pullbox with cover shall be capable of supporting an MS 18 Loading.
4. The maximum weight of the pullbox cover shall not exceed 27 kilograms.
5. The openings for the conduits on all pullboxes shall be pre-cast concrete knockouts.
6. After installing the conduits in the openings of the pullboxes, the Contractor shall fill the excess opening in the pre-cast knockouts with concrete mortar.
7. Prior to installing the pullboxes, the Contractor shall level the bottom of the trench and achieve a minimum of 95% relative compaction of the bottom of the trench.
8. All concrete shall be Class A (25MPa, min.)
9. Rebars shall be Grade 300 and all lapped splices shall be 360mm minimum.
10. The #57 or #67 size aggregate shall conform to latest version of AASHTO M43 (ASTM D 448).

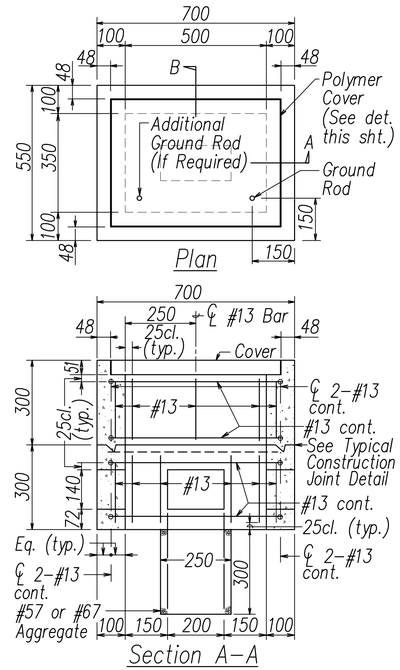

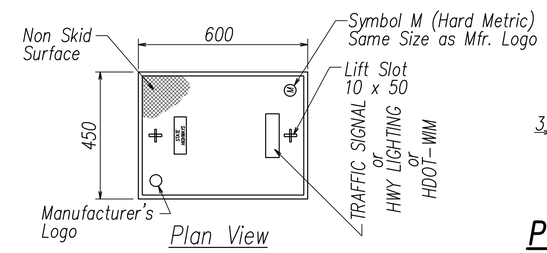

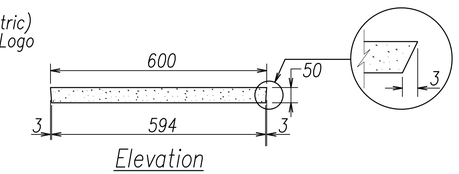

POLYMER CONCRETE COVER

Not to Scale

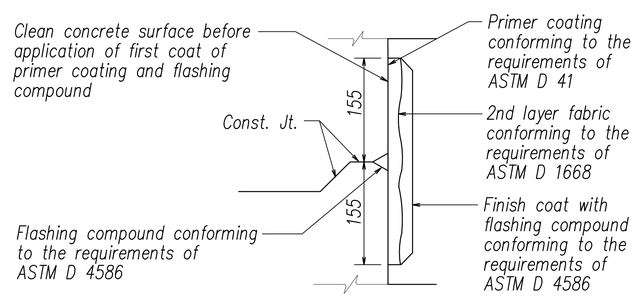

TYPICAL FLASHING COMPOUND WATERPROOFING DETAILS

Not to Scale

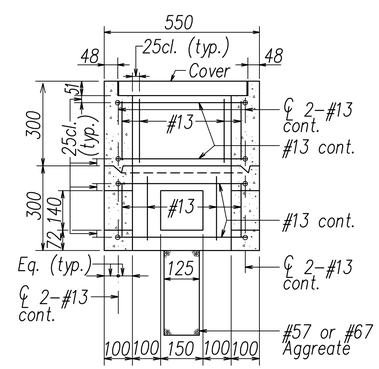

TYPE "A" PULLBOX

Scale: 1 : 100

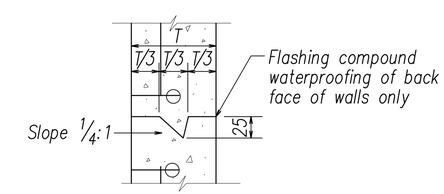

TYPICAL CONSTRUCTION JOINT DETAIL

Not to Scale

ORIGINAL PLAN	SURVEY PLOTTED BY	DATE
	DRAWN BY	
	TRACED BY	
NOTE BOOK	DESIGNED BY	
	QUANTITIES BY	
No.	CHECKED BY	

2021-09-27 8:48 AM P:\Acad\projects\28059\002_28059 Details05

BILLY J. ORNELLAS LICENSED PROFESSIONAL ENGINEER No. 11658-E HAWAII, U.S.A.

LICENSE EXPIRES 4/30/24

THIS WORK WAS PREPARED BY ME OR UNDER MY SUPERVISION

STATE OF HAWAII
DEPARTMENT OF TRANSPORTATION
HIGHWAYS DIVISION

PULLBOX & COVER DETAILS

Kamehameha Highway
Laieloa Stream Bridge Replacement
Federal-Aid Project No. BR-083-1(58)

Scale: AS NOTED Date: September 2023

SHEET No. E-22 OF 22 SHEETS

FED. ROAD DIST. NO.	STATE	FED. AID PROJ. NO.	FISCAL YEAR	SHEET NO.	TOTAL SHEETS
HAWAII	HAW.	BR-083-1(58)	2023	111	129

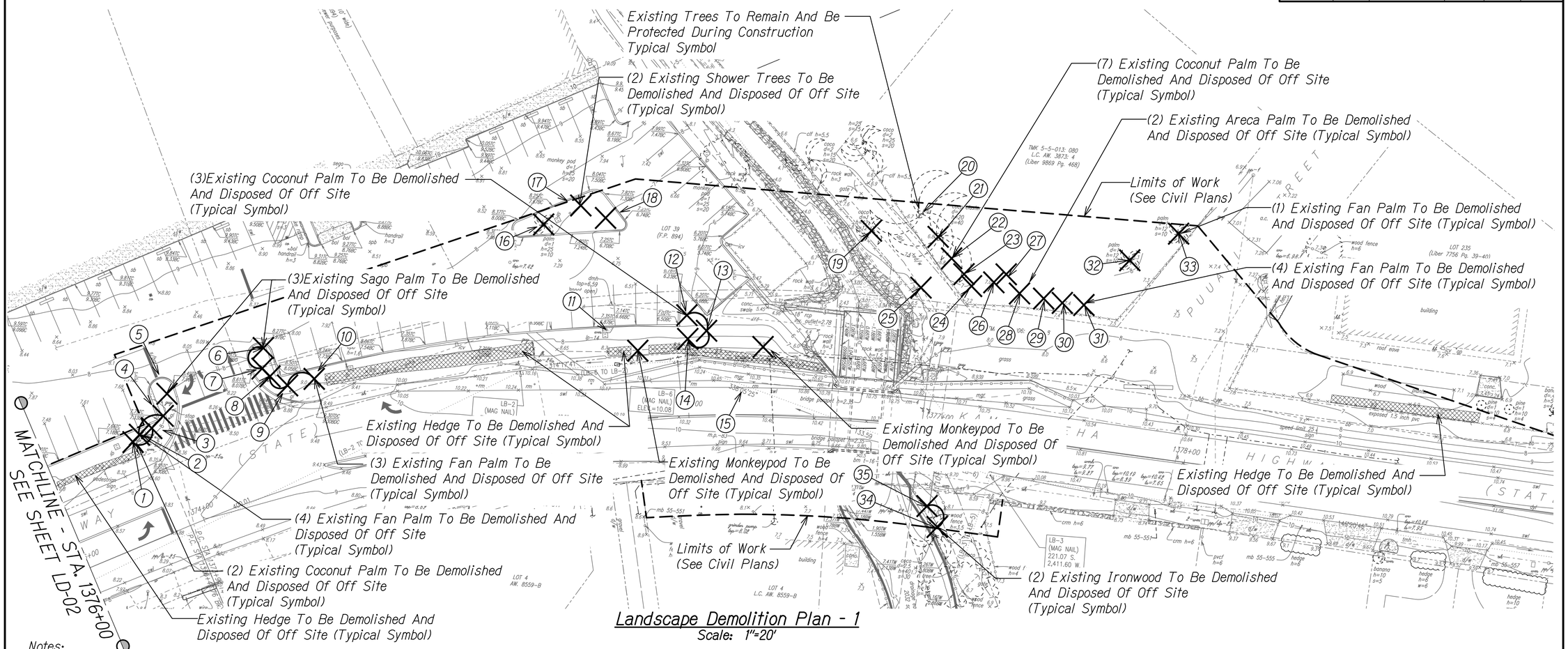

Landscape Demolition Plan - 1

Scale: 1"=20'

Notes:

1. Prior to the start of work, verify the extent of landscape demolition to accommodate work under this contract. Additional removal, patching, and restoration shall be considered incidental to the work.
2. To protect the White Tern and Hawaiian Hoary Bat habitats during construction, Contractor shall take special care when trimming, relocating, or removing trees on the project site. Woody plants greater than 15-feet in height must not be disturbed, trimmed, or removed during the White Tern nesting and fledging season, and the June 1 through September 15 Hawaiian Hoary Bat birthing and pup rearing season. Tree removal is restricted to the fall and early winter. Trees must be inspected prior to trimming or removal, and if there are signs that White Terns may be nesting or that Hawaiian Hoary Bats may be roosting in a tree, trimming or removal of the tree must be delayed until the White Tern chick have fully fledged, or the Hawaiian Hoary Bats have finished roosting.
3. Demolition of trees and palms includes removal of rootball, buttress roots, and surrounding roots 1-1/2" and larger to minimum depth of 18" below grade. Unless otherwise specified, surrounding roots shall be removed to a minimum depth of 12" below adjacent ground level.
4. Remove roots only where removal does not damage existing structures, pavements, or utilities to remain. If investigation indicates that roots to be removed may affect or surround such features to remain, expose the roots by hand excavation, air-spade pneumatic excavator, or similar. Do not rip out roots with a backhoe or similar equipment. The roots shall then be cut and removed, being careful not to damage the features to remain.

Legend

Existing Trees To Remain And Be Protected During Construction Operations

Existing Trees To Be Demolished And Disposed Of Off Site

Existing Hedge To Be Demolished And Disposed Of Off Site (Typical Symbol)

(1) Tree Disposition Call-out (Refer to sheet LD-03 for Tree Disposition list)

NORTH

0 1 3 5 feet

SCALE: 1" = 20'

RUSSELL Y.J. CHUNG
LICENSED PROFESSIONAL LANDSCAPE ARCHITECT
No. 6076
HAWAII, U.S.A.

LICENSE EXPIRES 4/30/24

THIS WORK WAS PREPARED BY ME OR UNDER MY SUPERVISION

STATE OF HAWAII
DEPARTMENT OF TRANSPORTATION
HIGHWAYS DIVISION

LANDSCAPE
DEMOLITION PLAN - 1

Kamehameha Highway
Laieloa Stream Bridge Replacement
Federal-Aid Project No. BR-083-1(58)

Scale: As Shown Date: September 2023

SHEET No. LD-01 OF 19 SHEETS

ORIGINAL PLAN
NOTE BOOK No.
SURVEY PLOTTED BY
DRAWN BY
TRACED BY
DESIGNED BY
QUANTITIES BY
CHECKED BY
DATE

FED. ROAD DIST. NO.	STATE	FED. AID PROJ. NO.	FISCAL YEAR	SHEET NO.	TOTAL SHEETS
HAWAII	HAW.	BR-083-1(58)	2023	112	129

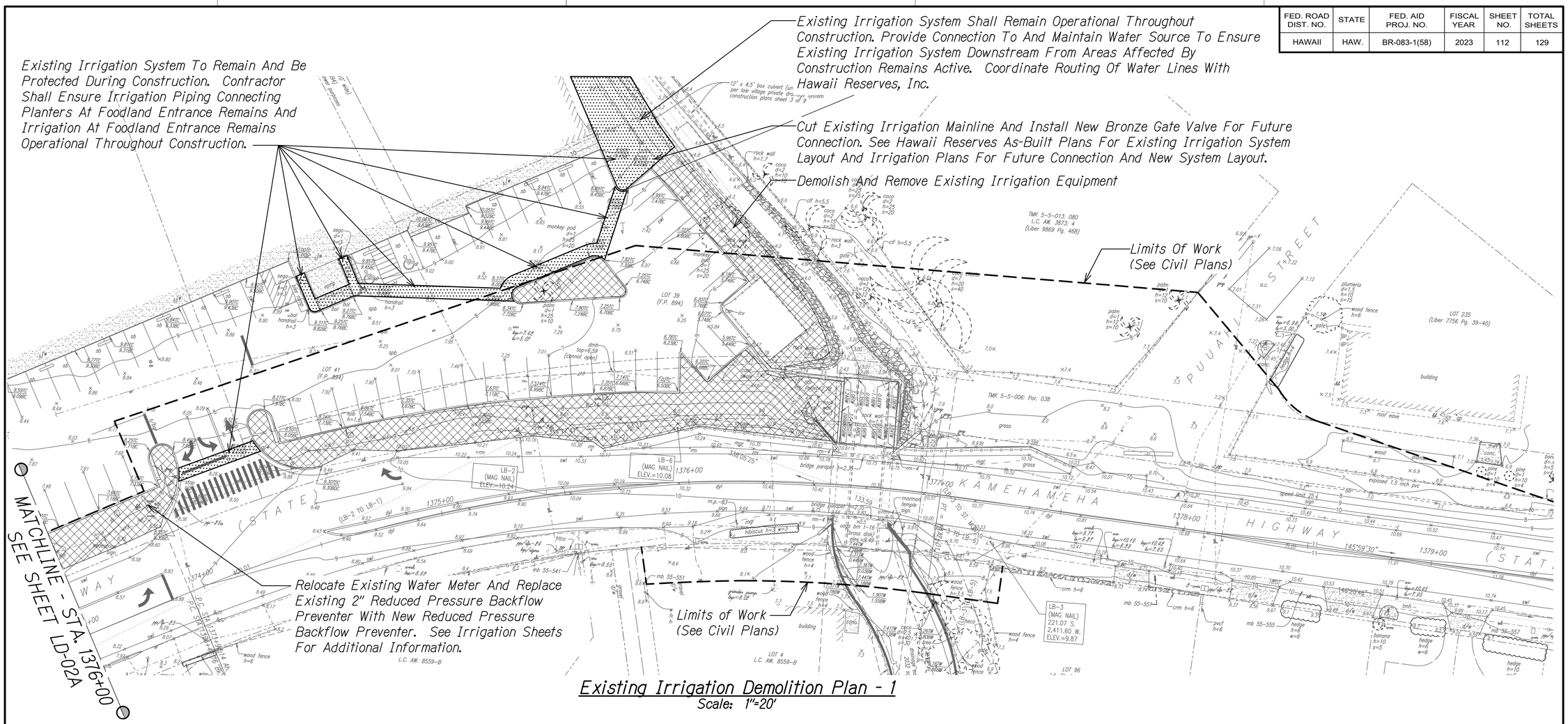

Existing Irrigation Demolition Plan - 1

Scale: 1"=20'

Notes:

1. Contractor shall refer to Owner's As-Built irrigation plans. Prior to the start of demolition and construction, coordinate with the Owner and Engineer to operate, flag, and document existing irrigation system requiring modification or protection to maintain existing planting not otherwise affected by construction.
   - 1.1. Verify existing irrigation source and backflow prevention device.
   - 1.2. Operate existing irrigation system valves being affected by work under this contract to determine extent of area being irrigated. Document areas being irrigated by the subject valves outside the current project limits. Irrigation of these areas shall be maintained and remain in operation throughout construction.
   - 1.3. Locate and flag existing irrigation pipes feeding into, and out of, the project limits. Work may require exploratory excavation. Protect as required for connection and restoration of existing irrigation where directed by the Engineer or as required.
   - 1.4. Contractor shall make a photographic record to document the condition of existing planting outside the project limits being irrigated by the existing system being affected.
2. Existing irrigation system serving areas outside the project limits shall remain operational. Perform work required to modify existing systems in order to keep such system operational. Should such system be damaged or made inoperable due to work under this contract, immediately make repairs or modifications. If directed, provide temporary irrigation until repairs or modifications can be made.
3. Unless otherwise noted, Contractor shall not be responsible for repair of existing irrigation system inoperable or damaged prior to the start of work under this contract. Contractor shall document such conditions prior to start.
4. Schedule work to minimize the duration which an existing irrigation zone becomes inoperable. Affected zone(s) shall become operable prior to proceeding with work in other zones.
5. Replace existing lawn damaged as a result of delays in restoring existing irrigation system damaged by work under this contract, or in making connections or modifications. Lawn outside the project limits which are affected by such delays are included.
6. Where noted or required for new construction, cap irrigation pipes and remove affected components. Salvage and clean existing existing irrigation valve boxes and valves to the Projects and Utilities Department of Hawaii Reserves, Inc. (Jeff Tyau).

NORTH

0 1 3 5 feet

SCALE: 1" = 20'

RUSSELL Y.J. CHUNG
LICENSED PROFESSIONAL LANDSCAPE ARCHITECT
No. 6076
HAWAII, U.S.A.

LICENSE EXPIRES 4/30/24

THIS WORK WAS PREPARED BY ME OR UNDER MY SUPERVISION

STATE OF HAWAII
DEPARTMENT OF TRANSPORTATION
HIGHWAYS DIVISION

EXISTING IRRIGATION DEMOLITION PLAN - 1

Kamehameha Highway
Laielua Stream Bridge Replacement
Federal-Aid Project No. BR-083-1(58)

Scale: As Shown Date: September 2023

SHEET No. LD-01A OF 19 SHEETS

ORIGINAL PLAN	SURVEY PLOTTED BY	DATE
	DRAWN BY	
NOTE BOOK	TRACED BY	
	DESIGNED BY	
	QUANTITIES BY	
No.	CHECKED BY	

FED. ROAD DIST. NO.	STATE	FED. AID PROJ. NO.	FISCAL YEAR	SHEET NO.	TOTAL SHEETS
HAWAII	HAW.	BR-083-1(58)	2023	113	129

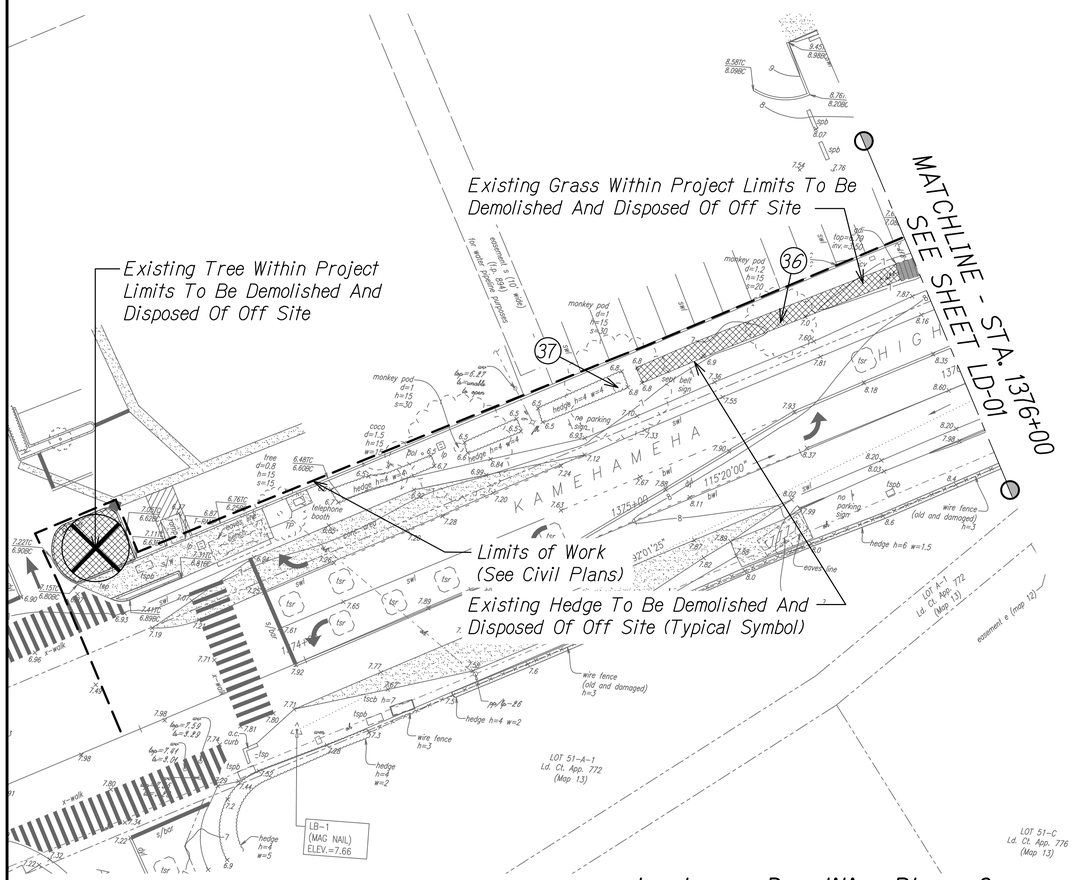

Landscape Demolition Plan - 2

Scale: 1"=20'

Legend

Existing Trees To Remain And Be Protected During Construction Operations

Existing Tree Within Project Limits To Be Demolished And Disposed Of Off Site

Existing Hedge or Groundcover To Be Demolished And Disposed Of Off Site (Typical Symbol)

(1) Tree Disposition Call-out (Refer to sheet LD-03 for Tree Disposition list)

Notes:

1. Prior to the start of work, verify the extent of landscape demolition to accommodate work under this contract. Additional removal, patching, and restoration shall be considered incidental to the work.
2. To protect the White Tern and Hawaiian Hoary Bat habitats during construction, Contractor shall take special care when trimming, relocating, or removing trees on the project site. Woody plants greater than 15-feet in height must not be disturbed, trimmed, or removed during the White Tern nesting and fledging season, and the June 1 through September 15 Hawaiian Hoary Bat birthing and pup rearing season. Tree removal is restricted to the fall and early winter. Trees must be inspected prior to trimming or removal, and if there are signs that White Terns may be nesting or that Hawaiian Hoary Bats may be roosting in a tree, trimming or removal of the tree must be delayed until the White Tern chick have fully fledged, or the Hawaiian Hoary Bats have finished roosting.
3. Demolition of trees and palms includes removal of rootball, buttress roots, and surrounding roots 1-1/2" and larger to minimum depth of 18" below grade. Unless otherwise specified, surrounding roots shall be removed to a minimum depth of 12" below adjacent ground level.
4. Remove roots only where removal does not damage existing structures, pavements, or utilities to remain. If investigation indicates that roots to be removed may affect or surround such features to remain, expose the roots by hand excavation, air-spade pneumatic excavator, or similar. Do not rip out roots with a backhoe or similar equipment. The roots shall then be cut and removed, being careful not to damage the features to remain.

ORIGINAL PLAN | SURVEY PLOTTED BY | DRAWN BY | TRACED BY | DESIGNED BY | QUANTITIES BY | CHECKED BY | DATE
NOTE BOOK No.

NORTH

0 1 3 5 feet
SCALE: 1" = 20'

RUSSELL Y.J. CHUNG
LICENSED PROFESSIONAL LANDSCAPE ARCHITECT
No. 6076
HAWAII, U.S.A.

LICENSE EXPIRES 4/30/24

THIS WORK WAS PREPARED BY ME OR UNDER MY SUPERVISION

STATE OF HAWAII
DEPARTMENT OF TRANSPORTATION
HIGHWAYS DIVISION

LANDSCAPE
DEMOLITION PLAN - 2

Kamehameha Highway
Laieloa Stream Bridge Replacement
Federal-Aid Project No. BR-083-1(58)

Scale: As Shown Date: September 2023

SHEET No. LD-02 OF 19 SHEETS

FED. ROAD DIST. NO.	STATE	FED. AID PROJ. NO.	FISCAL YEAR	SHEET NO.	TOTAL SHEETS
HAWAII	HAW.	BR-083-1(58)	2023	114	129

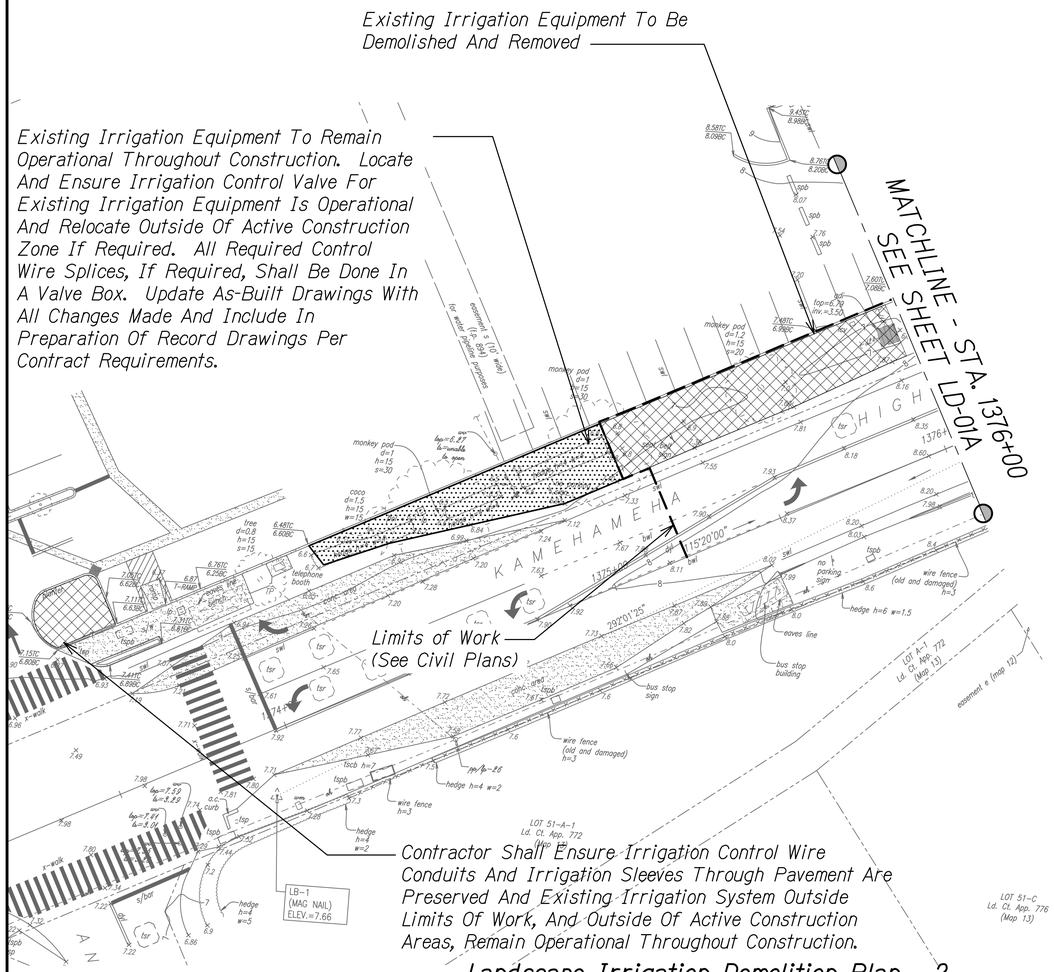

Landscape Irrigation Demolition Plan - 2

Scale: 1"=20'

Notes:

1. Contractor shall refer to Owner's As-Built irrigation plans. Prior to the start of demolition and construction, coordinate with the Owner and Engineer to operate, flag, and document existing irrigation system requiring modification or protection to maintain existing planting not otherwise affected by construction.
   - 1.1. Verify existing irrigation source and backflow prevention device.
   - 1.2. Operate existing irrigation system valves being affected by work under this contract to determine extent of area being irrigated. Document areas being irrigated by the subject valves outside the current project limits. Irrigation of these areas shall be maintained and remain in operation throughout construction.
   - 1.3. Locate and flag existing irrigation pipes feeding into, and out of, the project limits. Work may require exploratory excavation. Protect as required for connection and restoration of existing irrigation where directed by the Engineer or as required.
   - 1.4. Contractor shall make a photographic record to document the condition of existing planting outside the project limits being irrigated by the existing system being affected.
2. Existing irrigation system serving areas outside the project limits shall remain operational. Perform work required to modify existing systems in order to keep such system operational. Should such system be damaged or made inoperable due to work under this contract, immediately make repairs or modifications. If directed, provide temporary irrigation until repairs or modifications can be made.
3. Unless otherwise noted, Contractor shall not be responsible for repair of existing irrigation system inoperable or damaged prior to the start of work under this contract.
4. Schedule work to minimize the duration which an existing irrigation zone becomes inoperable. Affected zone(s) shall become operable prior to proceeding with work in other zones.
5. Replace existing lawn damaged as a result of delays in restoring existing irrigation system damaged by work under this contract, or in making connections or modifications. Lawn outside the project limits which are affect by such delays are included.
6. Where noted or required for new construction, cap irrigation pipes and remove affected components. Salvage and clean existing existing irrigation valve boxes and valves to the Projects and Utilities Department of Hawaii Reserves, Inc. (Jeff Tyau).

ORIGINAL PLAN	SURVEY PLOTTED BY	DATE
	DRAWN BY	"
NOTE BOOK	TRACED BY	"
	DESIGNED BY	"
No.	QUANTITIES BY	"
	CHECKED BY	"

NORTH

0 1 3 5 feet

SCALE: 1" = 20'

RUSSELL Y.J. CHUNG
LICENSED PROFESSIONAL LANDSCAPE ARCHITECT
No. 6076
HAWAII, U.S.A.

LICENSE EXPIRES 4/30/24

THIS WORK WAS PREPARED BY ME OR UNDER MY SUPERVISION

STATE OF HAWAII
DEPARTMENT OF TRANSPORTATION
HIGHWAYS DIVISION

EXISTING IRRIGATION DEMOLITION PLAN - 2

Kamehameha Highway
Laieloa Stream Bridge Replacement
Federal-Aid Project No. BR-083-1(58)

Scale: As Shown Date: September 2023

SHEET No. LD-02A OF 19 SHEETS

EXISTING TREE DISPOSITION LIST

SYMBOL	TREE SPECIMEN	TRUNK DIAMETER (FEET)	CANOPY SPREAD (FEET)	APPROXIMATE HEIGHT (FEET)
1	Coconut Palm	1	30	40
2	Fan Palm	0.7	10	20
3	Coconut Palm	1	30	50
4	Fan Palm	0.7	10	30
5	Sago Palm	1	5	5
6	Sago Palm	1	5	5
7	Sago Palm	1	5	5
8	Fan Palm	0.8	15	40
9	Fan Palm	0.8	15	40
10	Fan Palm	0.8	15	40
11	Monkeypod	2.3	40	40
12	Coconut Palm	1.2	30	30
13	Coconut Palm	1.2	30	30
14	Coconut Palm	1.2	30	30
15	Monkeypod	2.3	40	40
16	Fan Palm	1	10	25
17	Shower Tree	1	20	25
18	Shower Tree	1	25	20
19	Coconut Palm	1	12	12
20	Coconut Palm (Cluster)	7	40	20
21	Coconut Palm (Cluster)	7	40	20
22	Coconut Palm	3	20	25
23	Coconut Palm	3	20	25
24	Coconut Palm	3	20	25
25	Coconut Palm	1.5	15	20
26	Coconut Palm	3	20	25
27	Areca Palm	0.8	10	12
28	Areca Palm	1	10	12
29	Fan Palm	1	10	12
30	Bougainvillea Shrub	0.8	8	3
31	Fan Palm	1	10	15
32	Coconut Palm	1	10	12
33	Fan Palm	1	10	12
34	Ironwood	1	30	70
35	Ironwood	2.5	30	40
36	Autograph	0.33-0.5	6-8	10-12
37	Autograph	N/A	N/A	N/A

N/A = Not Applicable

ORIGINAL PLAN
NOTE BOOK No.
SURVEY PLOTTED BY
DRAWN BY
TRACED BY
DESIGNED BY
QUANTITIES BY
CHECKED BY
DATE

RUSSELL Y.J. CHUNG
LICENSED PROFESSIONAL LANDSCAPE ARCHITECT
No. 6076
HAWAII, U.S.A.

LICENSE EXPIRES 4/30/24

THIS WORK WAS PREPARED BY ME OR UNDER MY SUPERVISION

STATE OF HAWAII
DEPARTMENT OF TRANSPORTATION
HIGHWAYS DIVISION

TREE DISPOSITION LIST

Kamehameha Highway
Laieloa Stream Bridge Replacement
Federal-Aid Project No. BR-083-1(58)

Scale: As Shown Date: September 2023

TREE PROTECTION ZONE:

1. All trees identified on the plans to be protected. All trees 24" caliper or greater (as measured at 4½ feet height) shall be protected. If trees other than those designated for removal are damaged beyond survival condition as determined by the Engineer, the Contractor shall remove such trees and replace with a tree of the same species and size and maintain for the duration of the construction or 12 months whichever is greater at no cost to the State.

2. The recommended tree protection zone should be located at the outer drip line of the canopy of the tree. However, the minimum protection zone around a tree should be at least 10 feet from the external surface of the tree's trunk. For all palms, the minimum protection zone should be at least 10 feet from the external surface of the palm's trunk. Fence location may be adjusted as directed by the Engineer.

3. All underground utilities and irrigation lines should be routed outside of the tree protection zone. If utilities must traverse the tree protection zone, they shall be tunneled or bored at a depth of 4 feet or greater within the tree protection zone.

4. All protected trees shall be listed on the demolition, landscape, grading and utilities plans. If there is a discrepancy with all plans, Contractor shall contact Engineer immediately.

5. Protective fences shall be erected around trees identified on plan to remain and/or trees with a trunk diameter greater than 24 inches (as measured at a height of 4 ½ feet.) Protective fence shall be 4 feet high orange plastic mesh or approved equivalent supported on steel T-post a minimum of 6 feet long. Protective fence shall surround tree at a minimum of 10 feet from tree trunk with steel T-post at a minimum of 5 feet on center. Fence shall be installed prior to any demolition work and shall remain in place until site work is completed. Signs shall be posted on all four sides to read "TREE PROTECTION ZONE [TPZ] - NO GRADE CHANGE, STORAGE OR EQUIPMENT PERMITTED WITHIN TPZ."

6. For the duration of construction within the drip line of the trees to remain there must be:
   - No changes, alteration or disturbance to the grade by adding fill, excavating or scraping except as noted on plans;
   - No storage on construction materials or equipment;
   - No stockpiling of any construction materials or excavated materials;
   - No disposal of any liquids (e.g. concrete slurry, gas, oil, paint);
   - No vehicular traffic, equipment er excessive pedestrian traffic;
   - No attachment of any wires, ropes, lights or any other such attachment other than those of a protective nature to any tree to be preserved; and
   - No cleaning of equipment or material under the canopy of any tree or group of trees to be preserved

7. Auger tunneling, not trenching, shall be used where possible for utility placement within the drip line of the tree. If trenching is necessary it shall be hand dug within the drip line of the tree.

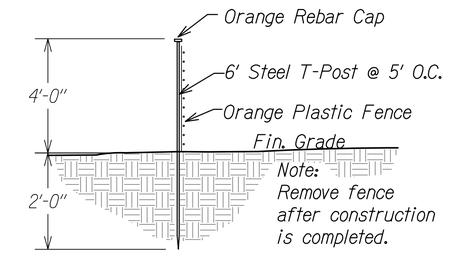

DETAIL A - ORANGE CONSTRUCTION FENCE
NOT TO SCALE

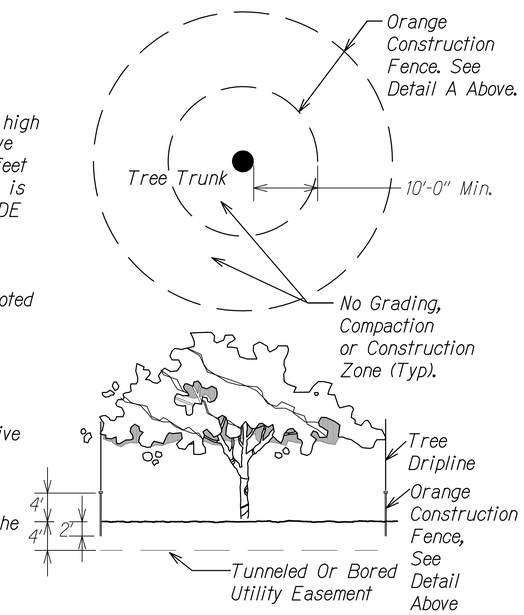

TREE PROTECTION
Scale: Not to Scale
1
LD-04 LD-04

ORIGINAL PLAN	SURVEY PLOTTED BY	DATE
	DRAWN BY	
	TRACED BY	
NOTE BOOK	DESIGNED BY	
	QUANTITIES BY	
No.	CHECKED BY	

RUSSELL Y.J. CHUNG
LICENSED PROFESSIONAL LANDSCAPE ARCHITECT
No. 6076
HAWAII, U.S.A.

LICENSE EXPIRES 4/30/24

THIS WORK WAS PREPARED BY ME OR UNDER MY SUPERVISION

STATE OF HAWAII
DEPARTMENT OF TRANSPORTATION
HIGHWAYS DIVISION

TREE PROTECTION DETAILS

Kamehameha Highway
Laieloa Stream Bridge Replacement
Federal-Aid Project No. BR-083-1(58)

Scale: As Shown Date: September 2023

SHEET No. LD-04 OF 19 SHEETS

FED. ROAD DIST. NO.	STATE	FED. AID PROJ. NO.	FISCAL YEAR	SHEET NO.	TOTAL SHEETS
HAWAII	HAW.	BR-083-1(58)	2023	117	129

NOTES:

1. To reduce shock, prune roots and branches of trees well in advance of moving (preferably during dormant season).

2. All relocation and pruning work shall be done under the supervision of an experienced and licensed arborist.

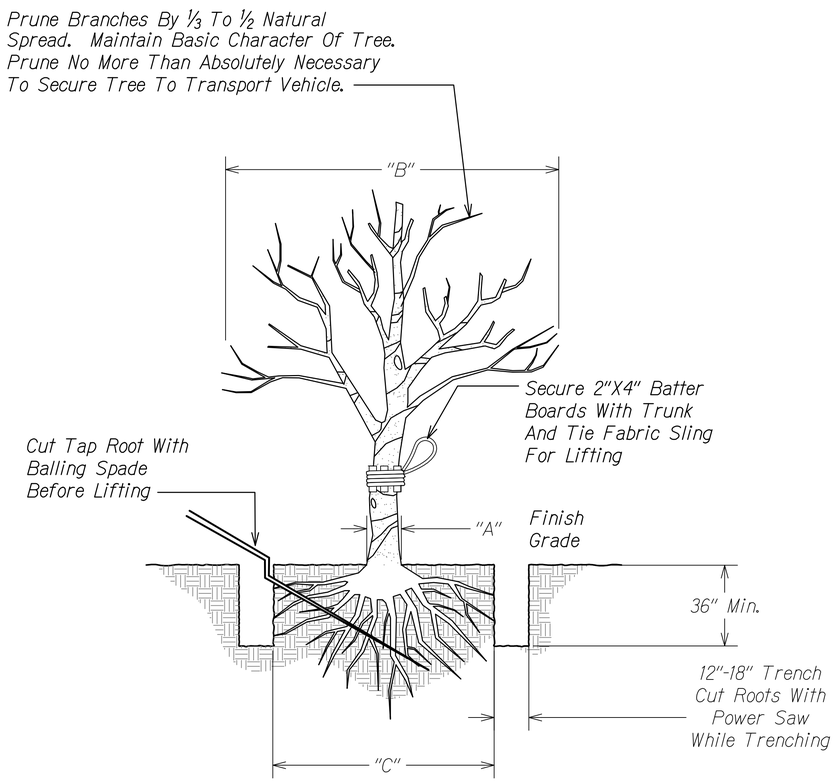

"A"	"B"	"C"
Caliper Size	Spread (Side)	Rootball Size
2"-6"	14"-26"	15"-24"
6"-8"	30"-48"	30"-36"
18"-30"	60"-96"	36"-96"
30" And Over	120"-144"	120"-240"

TREE TRANSPLANTING

Scale: Not to Scale

1
LD-05 LD-05

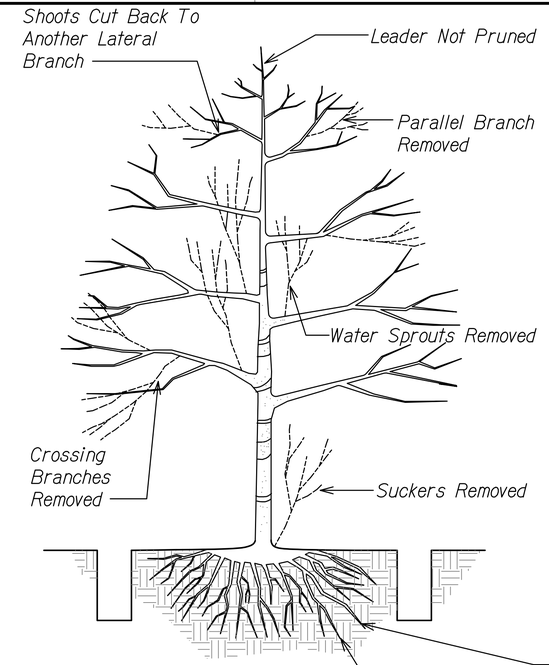

Tree Roots Shall Not Be Cut Unless Cutting Is Unavoidable. When Root Cutting Is Unavoidable, A Clean, Sharp Cut Shall Be Made To Avoid Shredding Or Smashing. Root Cuts Shall Be Made Back To A Lateral Root Whenever Possible, Roots 2" Or Greater In Diameter Shall Be Tunneled Or Bored Under And Shall Be Covered To Prevent Dehydration. Exposed Roots Shall Be Covered Immediately With Soil Or Burlap And Kept Moist. No Roots Larger Than 2" Shall Be Cut Unless No Other Alternative Is Feasible And Approved By A Certified Arborist And Engineer. Fertilizer And Water To Minimize Shock As Directed By A Certified Arborist Or Engineer.

NOTES:

1. Positions of first and second cuts may be reversed in some cases, particularly when cutting a large branch with a chainsaw.

2. Do not make flush cuts or leave stubs.

3. Do not paint cuts.

4. Remove dead, broken or malformed branches.

5. Remove all vines entwined in the tree or around its trunk.

6. All pruning shall be completed using clean sharp tools. All cuts shall be clean and smooth, with the bark intact with no rough edges or tears.

7. Dispose of all cuttings outside of right of way.

8. Retain the normal shape of the plant.

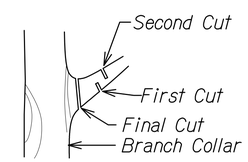

TYPICAL BRANCH REMOVAL

TREE PRUNING

Scale: Not to Scale

2
LD-05 LD-05

ORIGINAL PLAN
NOTE BOOK No.
SURVEY PLOTTED BY
DRAWN BY
TRACED BY
DESIGNED BY
QUANTITIES BY
CHECKED BY
DATE

RUSSELL Y.J. CHUNG
LICENSED PROFESSIONAL LANDSCAPE ARCHITECT
No. 6076
HAWAII, U.S.A.

LICENSE EXPIRES 4/30/24

THIS WORK WAS PREPARED BY ME OR UNDER MY SUPERVISION

STATE OF HAWAII
DEPARTMENT OF TRANSPORTATION
HIGHWAYS DIVISION

TREE RELOCATION AND TREE PRUNING DETAILS

Kamehameha Highway
Laieloa Stream Bridge Replacement
Federal-Aid Project No. BR-083-1(58)

Scale: As Shown Date: September 2023

SHEET No. LD-05 OF 19 SHEETS

FED. ROAD DIST. NO.	STATE	FED. AID PROJ. NO.	FISCAL YEAR	SHEET NO.	TOTAL SHEETS
HAWAII	HAW.	BR-083-1(58)	2023	118	129

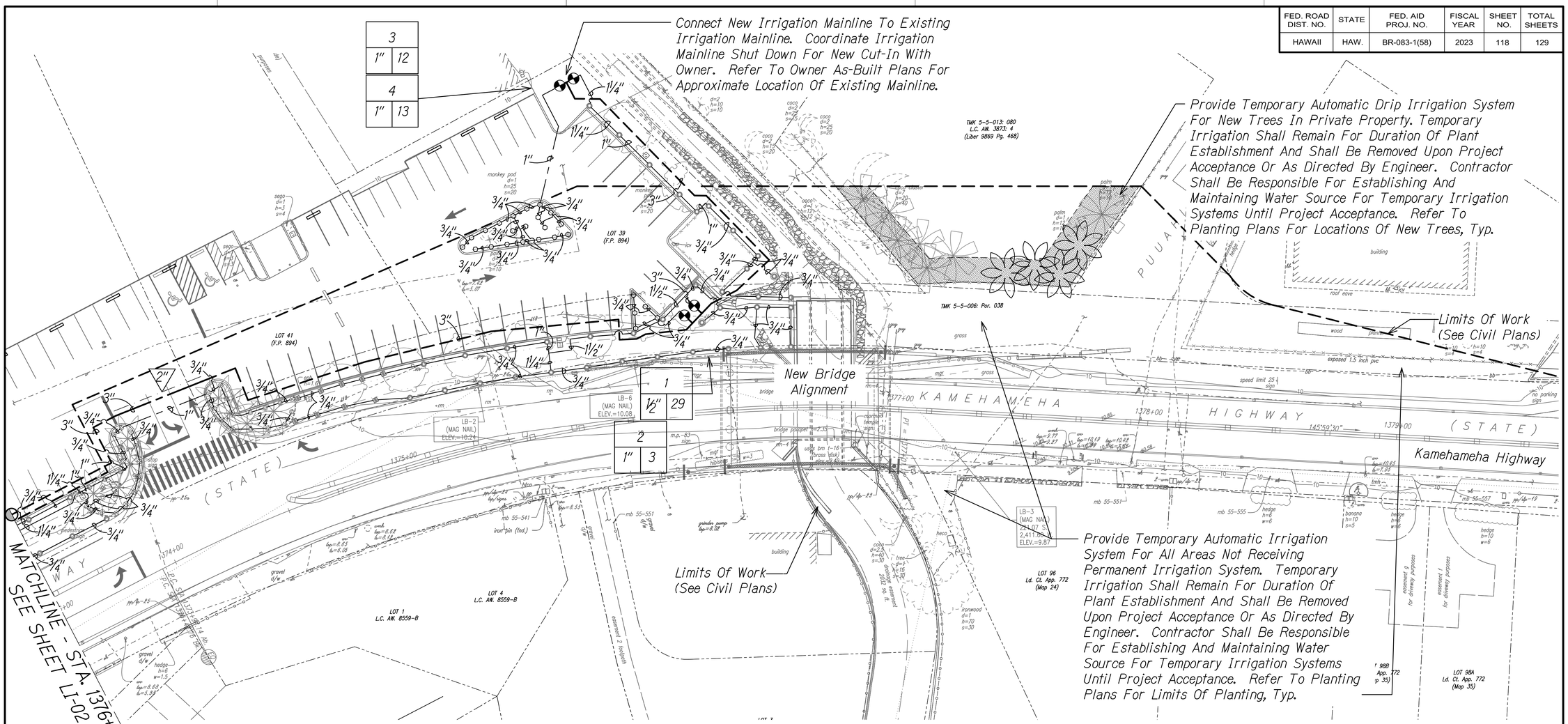

Notes:

1. Work shown is diagrammatic and subject to adjustments due to actual conditions encountered in the field. Provide work necessary to meet the design intent of the drawings. Make adjustments to avoid obstacles or improve performance.
2. Scale head locations from the drawings and lay out per current industry standards to meet the design intent shown. Major deviations due to obstructions or other site conditions shall be accepted by the Engineer before performing the work. Do not space heads further than shown. Provide valves in the vicinity of the locations shown and accessible for service and use.
3. Coordinate the installation and clearances for connection of pipes, sleeves, conduits, and appurtenances with other Contractors on the job. Ensure that these items are installed prior to placement of pavement or structures. Do not install tees or ells under pavement. Extend sleeves and conduits a minimum of 18" beyond the edge of paving.
4. When pipes cross existing pavement and a patch or joint is nearby, adjust route to occur within the patched area or adjacent to the joint. Remove the patch or sawcut at the joint with neat, straight, parallel lines. Minimize disturbance to existing pavement finishes. Repair to match existing finish to the satisfaction of the Engineer. Boring and passing sleeves under walkways shall be approved by the Engineer.
5. Whenever connections to existing irrigation systems is required, locate, expose, and verify existing pipes at the proposed connections prior to further trenching. For connection of new items to existing, verify the existing conditions and include items necessary for a complete installation.
6. Contractor shall route new irrigation control wires and connect to open stations on existing irrigation controller. Refer to Owner's As-Built plans and coordinate runtimes with Owner for plant establishment and turnover.
6. Repair landscape areas affected by trenching required for control wire connection to existing controller.
7. The irrigation system design is based on a minimum static pressure of 85 PSI at the point of connection. Prior to commencing with the work, test the pressure and report results to the Engineer.
8. Valve station numbering is for identification purposes and not an indication of valve operating sequence. Coordinate valve sequence with Hawaii Reserves, Inc.
9. Refer to LI-05 for additional notes.

NORTH

0 1 3 5 feet

SCALE: 1" = 20'

RUSSELL Y.J. CHUNG
LICENSED PROFESSIONAL LANDSCAPE ARCHITECT
No. 6076
HAWAII, U.S.A.

LICENSE EXPIRES 4/30/24

THIS WORK WAS PREPARED BY ME OR UNDER MY SUPERVISION

STATE OF HAWAII
DEPARTMENT OF TRANSPORTATION
HIGHWAYS DIVISION

FINAL ROADWAY LANDSCAPE IRRIGATION PLAN - 1

Kamehameha Highway
Laielea Stream Bridge Replacement
Federal-Aid Project No. BR-083-1(58)

Scale: As Shown Date: September 2023

SHEET No. LI-01 OF 19 SHEETS

ORIGINAL PLAN
NOTE BOOK No.
SURVEY PLOTTED BY
DRAWN BY
TRACED BY
DESIGNED BY
QUANTITIES BY
CHECKED BY
DATE

FED. ROAD DIST. NO.	STATE	FED. AID PROJ. NO.	FISCAL YEAR	SHEET NO.	TOTAL SHEETS
HAWAII	HAW.	BR-083-1(58)	2023	119	129

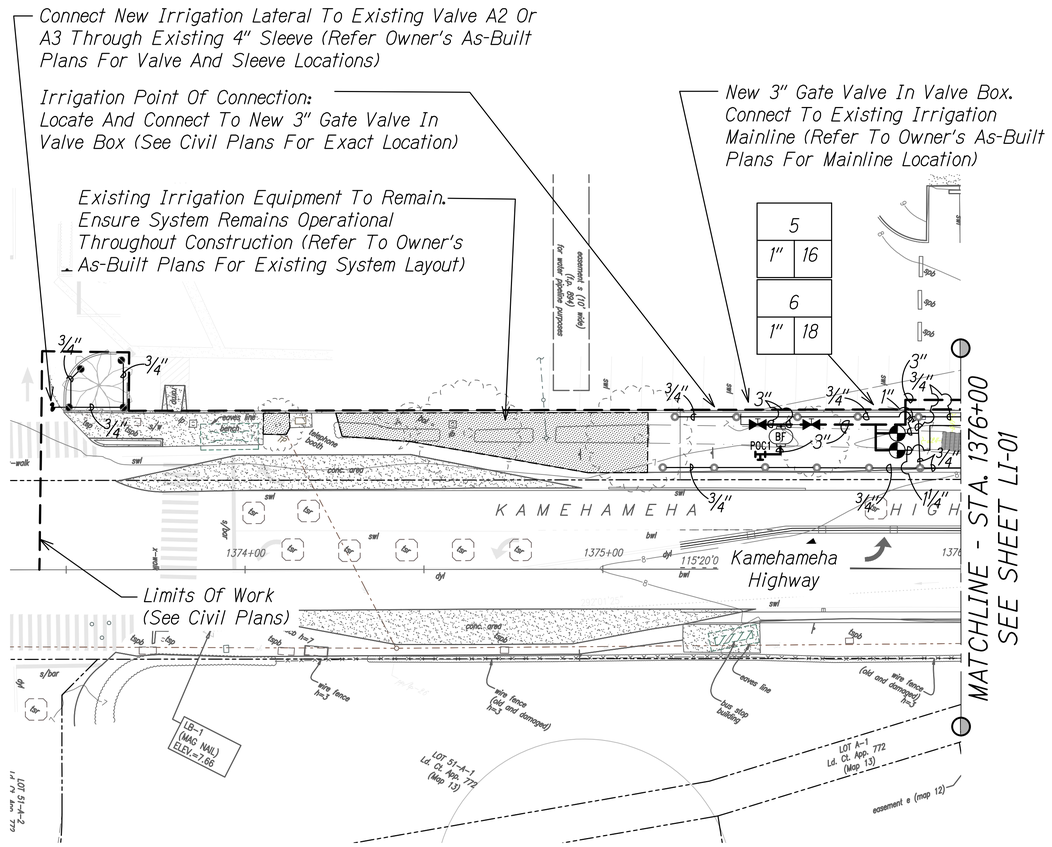

Notes:

1. Work shown is diagrammatic and subject to adjustments due to actual conditions encountered in the field. Provide work necessary to meet the design intent of the drawings. Make adjustments to avoid obstacles or improve performance.
2. Scale head locations from the drawings and lay out per current industry standards to meet the design intent shown. Major deviations due to obstructions or other site conditions shall be accepted by the Engineer before performing the work. Do not space heads further than shown. Provide valves in the vicinity of the locations shown and accessible for service and use.
3. Coordinate the installation and clearances for connection of pipes, sleeves, conduits, and appurtenances with other Contractors on the job. Ensure that these items are installed prior to placement of pavement or structures. Do not install tees or ells under pavement. Extend sleeves and conduits a minimum of 18" beyond the edge of paving.
4. When pipes cross existing pavement and a patch or joint is nearby, adjust route to occur within the patched area or adjacent to the joint. Remove the patch or sawcut at the joint with neat, straight, parallel lines. Minimize disturbance to existing pavement finishes. Repair to match existing finish to the satisfaction of the Contracting Officer. Boring and passing sleeves under walkways shall be approved by the Engineer.
5. Whenever connections to existing irrigation systems is required, locate, expose, and verify existing pipes at the proposed connections prior to further trenching. For connection of new items to existing, verify the existing conditions and include items necessary for a complete installation.
6. The irrigation system design is based on a minimum static pressure of 85 PSI at the point of connection. Prior to commencing with the work, test the pressure and report results to the Engineer.
7. Valve station numbering is for identification purposes and not an indication of valve operating sequence. Coordinate valve sequence with Hawaii Reserves, Inc.
8. Refer to LI-05 for additional notes.

Final Roadway Landscape Irrigation Plan - 2

Scale: 1"=20'

ORIGINAL PLAN		DATE
	SURVEY PLOTTED BY	
	DRAWN BY	
	TRACED BY	
NOTE BOOK	DESIGNED BY	
	QUANTITIES BY	
No.	CHECKED BY	

NORTH

0 1 3 5 feet

SCALE: 1" = 20'

RUSSELL Y.J. CHUNG
LICENSED PROFESSIONAL LANDSCAPE ARCHITECT
No. 6076
HAWAII, U.S.A.

LICENSE EXPIRES 4/30/24

THIS WORK WAS PREPARED BY ME OR UNDER MY SUPERVISION

STATE OF HAWAII
DEPARTMENT OF TRANSPORTATION
HIGHWAYS DIVISION

FINAL ROADWAY LANDSCAPE IRRIGATION PLAN - 2

Kamehameha Highway
Laieloa Stream Bridge Replacement
Federal-Aid Project No. BR-083-1(58)

Scale: As Shown Date: September 2023

SHEET No. LI-02 OF 19 SHEETS

FED. ROAD DIST. NO.	STATE	FED. AID PROJ. NO.	FISCAL YEAR	SHEET NO.	TOTAL SHEETS
HAWAII	HAW.	BR-083-1(58)	2023	120	129

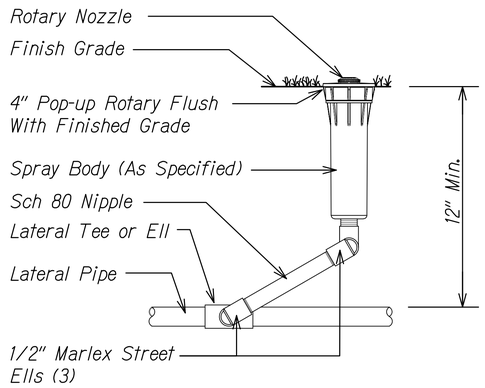

Notes:
KBI or LASCO Swing joints may be used upon approval by landscape architect.

Install part circle pop-up heads 6" from edge of paved areas.

4" ROTARY POP-UP DETAIL

1 LI-03 | LI-03

Scale: Not to Scale

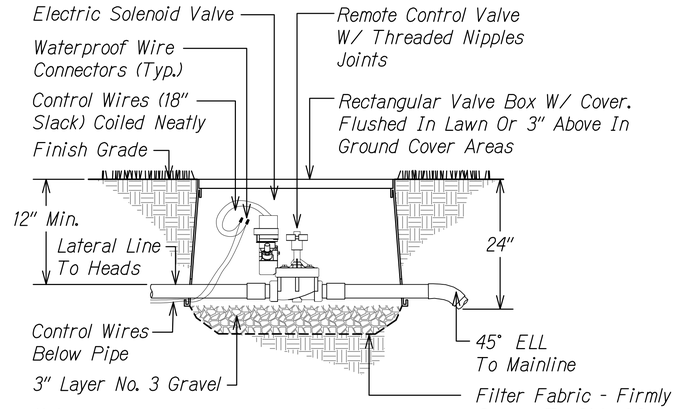

Note:
All valve box covers shall be labeled with valve type, zone number and controller number.

REMOTE CONTROL VALVE

3 LI-03 | LI-03

Scale: Not to Scale

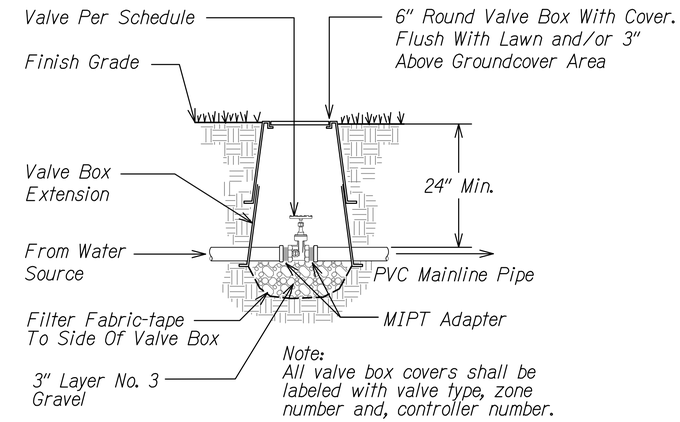

Note:
All valve box covers shall be labeled with valve type, zone number and, controller number.

GATE VALVE

5 LI-03 | LI-03

Scale: Not to Scale

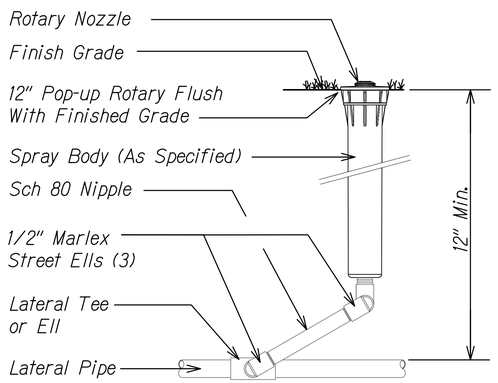

Notes:
KBI or LASCO Swing joints may be used upon approval by landscape architect.

Install part circle pop-up heads 6" from edge of paved areas.

12" ROTARY POP-UP

2 LI-03 | LI-03

Scale: Not to Scale

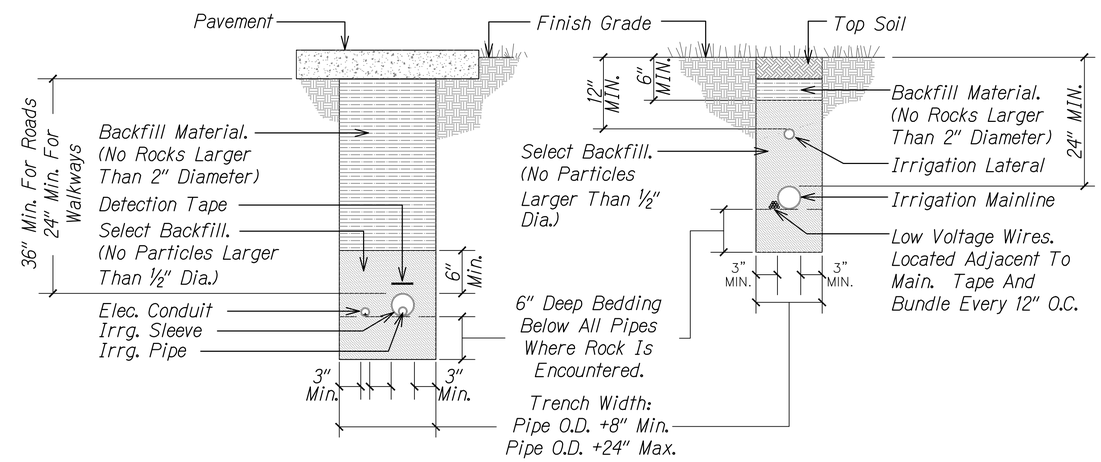

IRRIGATION TRENCHING DETAIL

4 LI-03 | LI-03

Scale: Not to Scale

ORIGINAL PLAN | SURVEY PLOTTED BY | DRAWN BY | TRACED BY | DESIGNED BY | QUANTITIES BY | CHECKED BY | DATE
NOTE BOOK No.

RUSSELL Y.J. CHUNG
LICENSED PROFESSIONAL LANDSCAPE ARCHITECT
No. 6076
HAWAII, U.S.A.

LICENSE EXPIRES 4/30/24

THIS WORK WAS PREPARED BY ME OR UNDER MY SUPERVISION

STATE OF HAWAII
DEPARTMENT OF TRANSPORTATION
HIGHWAYS DIVISION

IRRIGATION DETAILS - 1

Kamehameha Highway
Laieloa Stream Bridge Replacement
Federal-Aid Project No. BR-083-1(58)

Scale: As Shown | Date: September 2023

SHEET No. LI-03 OF 19 SHEETS

FED. ROAD DIST. NO.	STATE	FED. AID PROJ. NO.	FISCAL YEAR	SHEET NO.	TOTAL SHEETS
HAWAII	HAW.	BR-083-1(58)	2023	121	129

Notes:
1. Waterproof wire splice shall be UL listed for wet environments, direct burial use, and rated for 600-volts.
2. Waterproof wire splice kits shall consist of twist-on type wire connector and high impact, UV resistant tube pre-filled with moisture resistant grease.

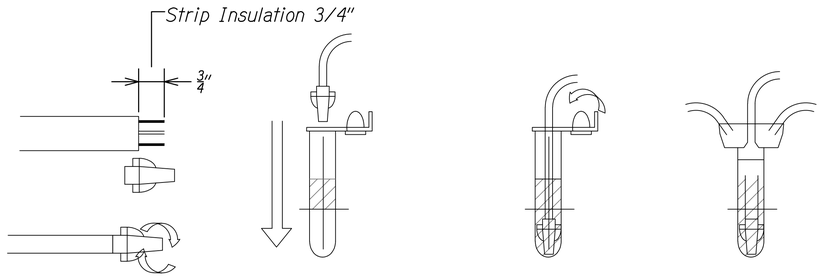

With Wire Ends Even, Insert Wires Into The Connector And Tighten Until Secure

Insert The Connector All The Way Into The Tube Until The Connector Rests On The Bottom

Fold Wires Into Channels

Close Cap

WATERPROOF WIRE SPLICE

Scale: Not to Scale

1 LI-03 LI-03

Note:
1. All pipe and fittings less than 4" in size shall be copper. all pipe and fittings 4" or greater in size shall be flanged ductile iron.
2. Min. height must be 12" above highest point of distribution, or that shown in chart, whichever is greatest.

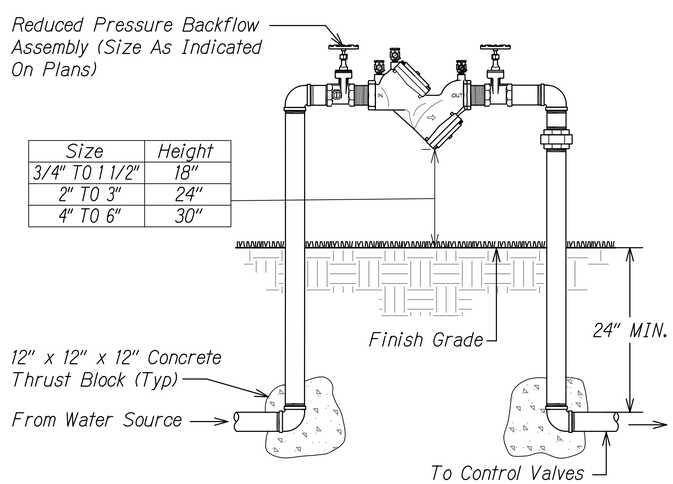

Size	Height
3/4" TO 1 1/2"	18"
2" TO 3"	24"
4" TO 6"	30"

REDUCE PRESSURE BACKFLOW PREVENTER

Scale: Not to Scale

2 LI-03 LI-03

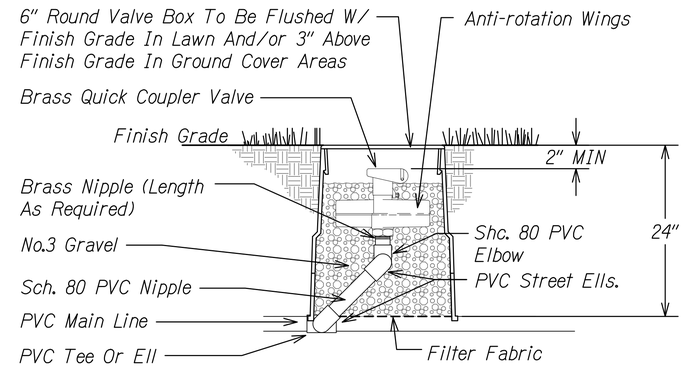

Note:
1. All valve box cover shall be labeled with valve type, zone number and, controller number.
2. Contractor shall provide one (1) quick coupler key, one (1) hose ell and one (1) cover key for each quick coupler valve.

REMOTE CONTROL VALVE

Scale: Not to Scale

3 LI-03 LI-03

ORIGINAL PLAN | SURVEY PLOTTED BY | DRAWN BY | TRACED BY | DESIGNED BY | QUANTITIES BY | CHECKED BY | DATE
NOTE BOOK No.

RUSSELL Y.J. CHUNG
LICENSED PROFESSIONAL LANDSCAPE ARCHITECT
No. 6076
HAWAII, U.S.A.

LICENSE EXPIRES 4/30/24

THIS WORK WAS PREPARED BY ME OR UNDER MY SUPERVISION

STATE OF HAWAII
DEPARTMENT OF TRANSPORTATION
HIGHWAYS DIVISION

IRRIGATION DETAILS - 2

Kamehameha Highway
Laieloa Stream Bridge Replacement
Federal-Aid Project No. BR-083-1(58)

Scale: As Shown Date: September 2023

SHEET No. LI-04 OF 19 SHEETS

IRRIGATION GENERAL NOTES

1. This plan is diagrammatic. Irrigation system is subject to field adjustments, with approval of Engineer, due to unanticipated site conditions. Locate all mainlines, laterals, valves and sprinkler heads within planting areas, unless otherwise noted. Place mainline in planting areas where no sleeves are shown. Avoid any conflict between underground utilities, structures and plantings. The Contractor shall be responsible for locating and protecting all existing utilities. Bury pressure mainlines 24" deep minimum and lateral lines 12" deep minimum when installed in landscape planting areas.

2. Contractor shall install all irrigation equipment (ie. irrigation lines, control wires, valves, heads, etc.) per industry standards and manufacturer's written instructions. Existing gate valves, point of connection, electrical power, etc. are derived from the best available information and on-site inspection. The Contractor shall verify those points of connection noted and report any discrepancies to the Engineer.

3. The irrigation system was designed to perform with a minimum static pressure of 85 PSI and minimum water flow of 65 GPM at the Point Of Connection (P.O.C.) The Contractor shall be responsible for verifying these requirements through onsite testing and shall report the findings to the Engineer at least thirty (30) days prior to start of construction.

4. Contractor shall secure all necessary permits and observe all local codes and regulations. the Contractor shall confirm all site dimensions and conditions, and report any discrepancies to the Engineer.

5. Landscape Contractor shall coordinate with Site Contractor the installation of all sleeves, conduits, mainlines and laterals under pavement and through walls. Contractor shall ensure that these items are laid prior to placement of pavement or wall structures.

6. Locate and install all sprinkler heads 6" from sidewalks, curbs, driveways, buildings and walls unless otherwise noted. Flex tubing shall be installed on all sprinkler heads along sidewalks, driveways, and parking spaces. Adjust all sprinkler heads and flow control for maximum coverage and minimum overthrow and misting. Operate only one valve at a time per controller, unless otherwise noted.

7. Contractor shall adjust all sprinkler heads as required to accommodate any vertical obstructions that may occur, including but not limited to light poles, fire hydrants, etc. Verify all sprinkler head layout with the Engineer prior to commencing work.

8. Submit for the Engineer's acceptance six (6) copies of detailed scaled drawings and wiring diagrams for permanent and temporary irrigation systems. Not proposed deviations from the Contract. Submit these items no later than 60 days before of the start of construction.

9. Submit for the Engineer's acceptance product data for each type of product indicated on Drawings. include rated capacities, operating characteristics, electrical characteristics, furnished specialties, and accessories.

10. Substitutions: Substitutions of any equipment or materials specified or indicated will not be considered unless the Engineer deems the substitution to be of equal or greater quality and for which a cost savings is offered.

11. Do not backfill irrigation trenches until hydrostatic testing in the presence of the Engineer has been completed and accepted. Center load backfill over pipes, leaving all joints exposed until the installation has been inspected, tested, and accepted by the Engineer.

12. Perform hydrostatic test as specified in the presence of the Engineer. Notify the Engineer at least ten (10) working days in advance of test. If leaks develop, remake joints and repeat tests until the entire system has proven watertight and is accepted by the Engineer. Do not backfill until there is no further sign of leakage.

13. Perform operability test as specified in the presence of the Engineer. Notify the Engineer at least ten (10) working days in advance of test. After electrical circuitry has been energized, operate controllers and automatic control valves to confirm proper system operation.

14. Perform coverage test as specified in the presence of the Engineer. Notify the Engineer at least ten (10) working days in advance of test. Upon completion of the sprinkler system and prior to planting of shrubs, ground cover or turf, perform a coverage test to determine that irrigation coverage for all planting areas is complete and provides head-to-head coverage. Adjust sprinkler heads as required to ensure adequate coverage to all planting areas. Contractor shall furnish materials and perform work required to correct any inadequacies of coverage. Reschedule and perform additional coverage test with Engineer for acceptance.

15. Locate valve boxes so that the outer edges are no closer than five feet to roadway or pedestrian pavement or as directed by Engineer. Group valve boxes as feasible. Install valves/valve boxes in ground cover areas unless otherwise noted or as directed by the Engineer. Installation of valves/valve boxes in lawn areas is not acceptable and will be rejected.

16. If plans do not specify depth of excavation, provide minimum cover to finish grade as follows:

    a. 24 inches for irrigation mainline
    b.12 inches for irrigation lateral
    c. 24 inches for sleeve or conduit under landscape/walkway pavement
    d. 36 inches for sleeve or conduit under roadway/vehicular pavement
    e. For controller wires and conduits in unpaved areas, depth equal to that of mainline pipe.

17. After installation of irrigation, landscape contractor shall provide as-built mark-up information showing all changes and deviations from the original plans as specified for acceptance by the Engineer. As-Built drawings shall include all substituted materials and equipment, as well as dimensions of each pipe from buildings, control points, and/or fixed features; include exact location of each valve, elbow, tee, and sprinkler zone located in the field. Provide one (1) reproducible copy documenting these 'As-Built' conditions, to the Engineer upon completion of irrigation installation work or thirty (30) days before final inspection, whichever is sooner. As-Built mark-ups shall be done at full size, at the same scale as the original drawings, clearly legible and reproducible. Contractor is solely responsible for the accuracy and completeness of As-Built mark-ups.

18. Contractor shall make all wire splices inside of valve boxes or control wire pull boxes.

19. Incidental parts which may not be specified or indicated on drawings, but are required to complete the irrigation system shall be furnished and installed with no additional cost to the State.

20. Contractor shall provide, install, and maintain a automatic temporary irrigation system for all new planting areas within the project limits that do not have a permanent irrigation system. The Contractor shall be resposnsible for locating, determining, and establishing the water source and delivery method of water to the project site. Contractor shall be responsible for obtaining and maintaining all necessary permits and agreements for the source of water for the irrigation system as well as ensuring water is delivered to the site for the duration of the project. Replace watering equipment that cuase erosion or runoff. Water will be considered an incidental cost to the project. The Contractor shall provide and maintain all equipment required to delover water to the project site. Contractor shall remove temporary irrigation system components and repair any damage to planting areas caused by the removal of the temporary irrigation system compnents upon final acceptance or as directed by the Engineer.

RUSSELL Y.J. CHUNG
LICENSED PROFESSIONAL LANDSCAPE ARCHITECT
No. 6076
HAWAII, U.S.A.

LICENSE EXPIRES 4/30/24

THIS WORK WAS PREPARED BY ME OR UNDER MY SUPERVISION

STATE OF HAWAII
DEPARTMENT OF TRANSPORTATION
HIGHWAYS DIVISION

IRRIGATION NOTES

Kamehameha Highway
Laielua Stream Bridge Replacement
Federal-Aid Project No. BR-083-1(58)

Scale: As Shown Date: September 2023

ORIGINAL PLAN
NOTE BOOK No.
SURVEY PLOTTED BY
DRAWN BY
TRACED BY
DESIGNED BY
QUANTITIES BY
CHECKED BY
DATE

FED. ROAD DIST. NO.	STATE	FED. AID PROJ. NO.	FISCAL YEAR	SHEET NO.	TOTAL SHEETS
HAWAII	HAW.	BR-083-1(58)	2023	123	129

IRRIGATION SCHEDULE

SYMBOL	MANUFACTURER/MODEL/DESCRIPTION	ARC	PSI	GPM	RADIUS
	RAIN BIRD RD-04-S-P30-F 8 SERIES MPR TURF SPRAY, 4" POP-UP, WITH 30 PSI IN-STEM PRESSURE REGULATION, SEAL-A-MATIC CHECK VALVE, AND FLOW-SHIELD TECHNOLOGY. 1/2" NPT FEMALE THREADED INLET.	360	15-30	0.74-1.05	5'-8'
	RAIN BIRD RD-04-S-P30-F 8 SERIES MPR TURF SPRAY, 4" POP-UP, WITH 30 PSI IN-STEM PRESSURE REGULATION, SEAL-A-MATIC CHECK VALVE, AND FLOW-SHIELD TECHNOLOGY. 1/2" NPT FEMALE THREADED INLET.	180	15-30	0.37-0.52	5'-8'
	RAIN BIRD RD-04-S-P30-F HE-VAN SERIES TURF SPRAY, 4" POP-UP, WITH 30 PSI IN-STEM PRESSURE REGULATION, SEAL-A-MATIC CHECK VALVE, AND FLOW-SHIELD TECHNOLOGY. 1/2" NPT FEMALE THREADED INLET.	ADJ	15-30	0.21-1.17	5'-8'
	RAIN BIRD RD-12-S-P30-F 8 SERIES MPR SHRUB SPRAY, 12" POP-UP, WITH 30 PSI IN-STEM PRESSURE REGULATION, SEAL-A-MATIC CHECK VALVE, AND FLOW-SHIELD TECHNOLOGY. 1/2" NPT FEMALE THREADED INLET.	360	15-30	0.74-1.05	5'-8'
	RAIN BIRD RD-12-S-P30-F 8 SERIES MPR SHRUB SPRAY, 12" POP-UP, WITH 30 PSI IN-STEM PRESSURE REGULATION, SEAL-A-MATIC CHECK VALVE, AND FLOW-SHIELD TECHNOLOGY. 1/2" NPT FEMALE THREADED INLET.	180	15-30	0.37-0.52	5'-8'
	RAIN BIRD RD-12-S-P30-F HE-VAN SERIES SHRUB SPRAY, 12" POP-UP, WITH 30 PSI IN-STEM PRESSURE REGULATION, SEAL-A-MATIC CHECK VALVE, AND FLOW-SHIELD TECHNOLOGY. 1/2" NPT FEMALE THREADED INLET.	ADJ	15-30	0.21-1.17	5'-8'
	RAIN BIRD RD-12-S-P30-F HE-VAN SERIES SHRUB SPRAY, 12" POP-UP, WITH 30 PSI IN-STEM PRESSURE REGULATION, SEAL-A-MATIC CHECK VALVE, AND FLOW-SHIELD TECHNOLOGY. 1/2" NPT FEMALE THREADED INLET.	ADJ	15-30	0.32-1.78	7'-10'
	RAIN BIRD R-1318 RD-04-SAM-P45 TURF ROTATOR, 13'-18' ROTARY STREAM, W/RD-00 TURF SPRAY BODY ON 4" POP-UP, WITH CHECK VALVE AND 45 PSI IN-STEM PRESSURE REGULATOR. 1/2" NPT FEMALE THREADED INLET.	360	30-55	1.10-1.45	13'-18'
	RAIN BIRD R-VAN14 RD-04-SAM-P45 TURF ROTATOR, 8'-14' ROTARY STREAM, W/RD-00 TURF SPRAY BODY ON 4" POP-UP, WITH CHECK VALVE AND 45 PSI IN-STEM PRESSURE REGULATOR. 1/2" NPT FEMALE THREADED INLET.	ADJ	30-55	0.28-1.17	8'-14'

IRRIGATION SCHEDULE

SYMBOL	MANUFACTURER/MODEL/DESCRIPTION	ARC	PSI	GPM	RADIUS
	RAIN BIRD RVAN18 RD-04-SAM-P45 TURF ROTATOR, 13'-18' HAND ADJUSTABLE ROTARY STREAM, W/RD-00 TURF SPRAY BODY, 4.0" POP-UP. WITH SEAL-A-MATIC CHECK VALVE AND 45 PSI IN-STEM PRESSURE REGULATION.	ADJ	30-55	0.42-1.62	13'-18'

SYMBOL	MANUFACTURER/MODEL/DESCRIPTION
	RAIN BIRD PESB-PRS-D 1", 1-1/2", 2" PLASTIC INDUSTRIAL VALVES. LOW FLOW OPERATING CAPABILITY, GLOBE CONFIGURATION. WITH PRESSURE REGULATING MODULE, AND SCRUBBER TECHNOLOGY FOR RELIABLE PERFORMANCE IN DIRTY WATER IRRIGATION APPLICATIONS.
	NIBCO T-113 CLASS 125 BRONZE GATE SHUT OFF VALVE WITH WHEEL HANDLE, SAME SIZE AS MAINLINE PIPE DIAMETER AT VALVE LOCATION. SIZE RANGE - 1/4" - 3"
BF	WATTS LF909M1 2" LEAD FREE REDUCED PRESSURE BACKFLOW PREVENTER.
POC1	POINT OF CONNECTION 2" LOCATE AND CONNECT TO NEW 2" GATE VALVE IN VALVE BOX (SEE CIVIL PLANS FOR EXACT LOCATION)
	IRRIGATION LATERAL LINE: PVC CLASS 200 SDR 21
	IRRIGATION LATERAL LINE: TYPE K COPPER PIPE
	IRRIGATION MAINLINE: PVC SCHEDULE 40
	IRRIGATION MAINLINE: TYPE K COPPER PIPE
	PIPE SLEEVE: PVC SCHEDULE 80
	CONTROL WIRE CONDUIT: PVC SCHEDULE 80 UL APPROVED TYPICAL CONDUIT FOR IRRIGATION CONTROL WIRE. CONDUIT SIZE SHALL ALLOW FOR IRRIGATION CONTROL WIRE TO EASILY SLIDE THROUGH CONDUIT MATERIAL. EXTEND SLEEVES 18 INCHES BEYOND EDGES OF PAVING OR CONSTRUCTION.

VALVE CALLOUT

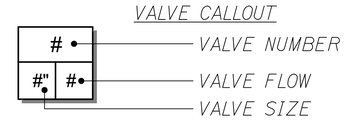

CONDUIT & SLEEVE CALLOUT

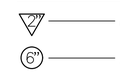

RUSSELL Y.J. CHUNG
LICENSED PROFESSIONAL LANDSCAPE ARCHITECT
No. 6076
HAWAII, U.S.A.

LICENSE EXPIRES 4/30/24

THIS WORK WAS PREPARED BY ME OR UNDER MY SUPERVISION

STATE OF HAWAII
DEPARTMENT OF TRANSPORTATION
HIGHWAYS DIVISION

IRRIGATION SCHEDULE

Kamehameha Highway
Laieloa Stream Bridge Replacement
Federal-Aid Project No. BR-083-1(58)

Scale: As Shown Date: September 2023

SHEET No. LI-06 OF 19 SHEETS

ORIGINAL PLAN | SURVEY PLOTTED BY | DRAWN BY | TRACED BY | DESIGNED BY | QUANTITIES BY | CHECKED BY | DATE
NOTE BOOK No.

FED. ROAD DIST. NO.	STATE	FED. AID PROJ. NO.	FISCAL YEAR	SHEET NO.	TOTAL SHEETS
HAWAII	HAW.	BR-083-1(58)	2023	124	129

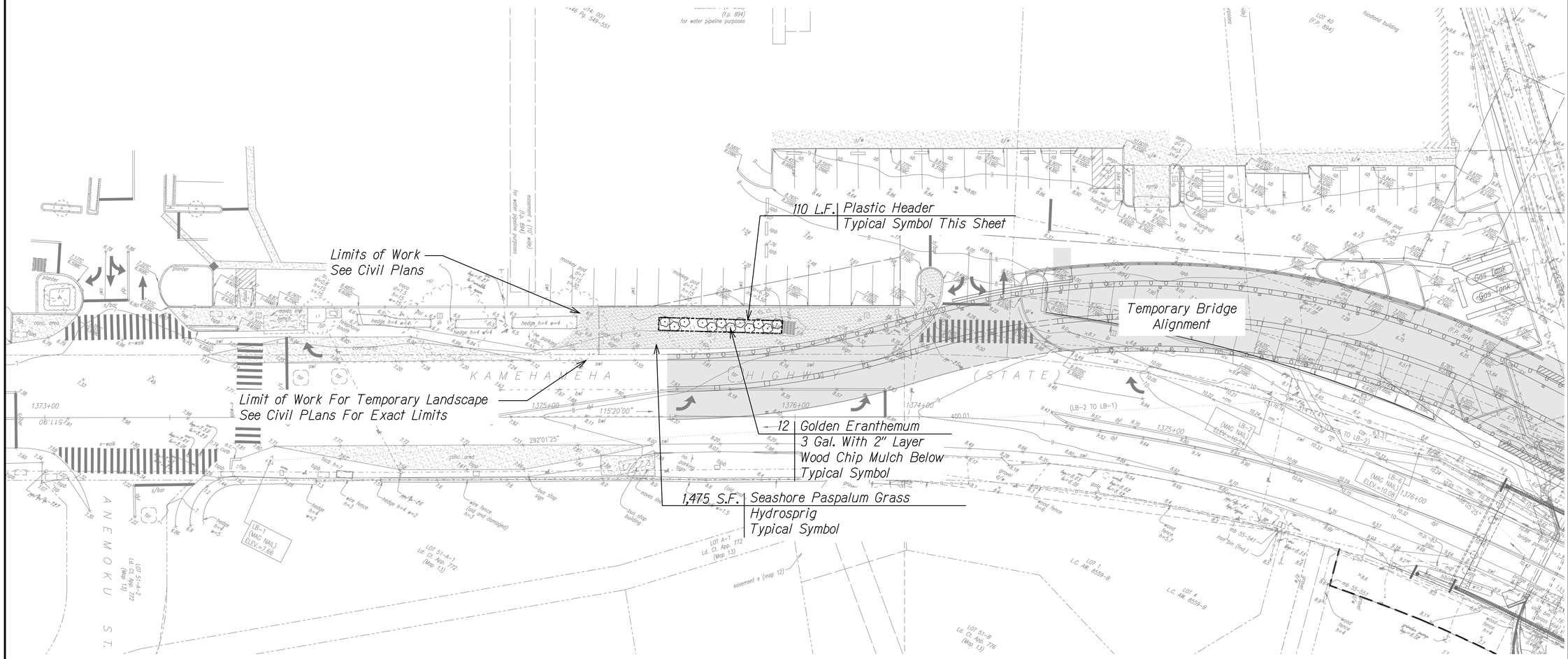

Temporary Roadway Planting Plan

Scale: 1"=20'

Notes:

1. Contractor shall provide a new temporary below-grade irrigation system for planting areas fronting Laie Shopping Center to replace the existing irrigation system components damaged during construction operations. The Contractor shall locate and connect to the existing irrigation mainline. All new irrigation valves shall be connected to the existing irrigation controller.
2. Contractor shall provide a temporary automatic irrigation system for all new and relocated trees, shrubs, ground cover, and grass areas not receiving a permanent irrigation system for the duration of the plant establishment period. Temporary automatic irrigation system shall be considered incidental to the various planting items.
3. Provide and incorporate 2" layer of soil amendments to 4" layer imported topsoil. Incorporate additional amendments as recommended by soil analysis.

ORIGINAL PLAN	SURVEY PLOTTED BY	DATE
	DRAWN BY	
	TRACED BY	
NOTE BOOK	DESIGNED BY	
	QUANTITIES BY	
No.	CHECKED BY	

NORTH

0 1 3 5 feet

SCALE: 1" = 20'

RUSSELL Y.J. CHUNG
LICENSED PROFESSIONAL LANDSCAPE ARCHITECT
No. 6076
HAWAII, U.S.A.

LICENSE EXPIRES 4/30/24

THIS WORK WAS PREPARED BY ME OR UNDER MY SUPERVISION

STATE OF HAWAII
DEPARTMENT OF TRANSPORTATION
HIGHWAYS DIVISION

TEMPORARY ROADWAY LANDSCAPE PLANTING PLAN

Kamehameha Highway
Laielua Stream Bridge Replacement
Federal-Aid Project No. BR-083-1(58)

Scale: As Shown Date: September 2023

SHEET No. LP-01 OF 19 SHEETS

FED. ROAD DIST. NO.	STATE	FED. AID PROJ. NO.	FISCAL YEAR	SHEET NO.	TOTAL SHEETS
HAWAII	HAW.	BR-083-1(58)	2023	125	129

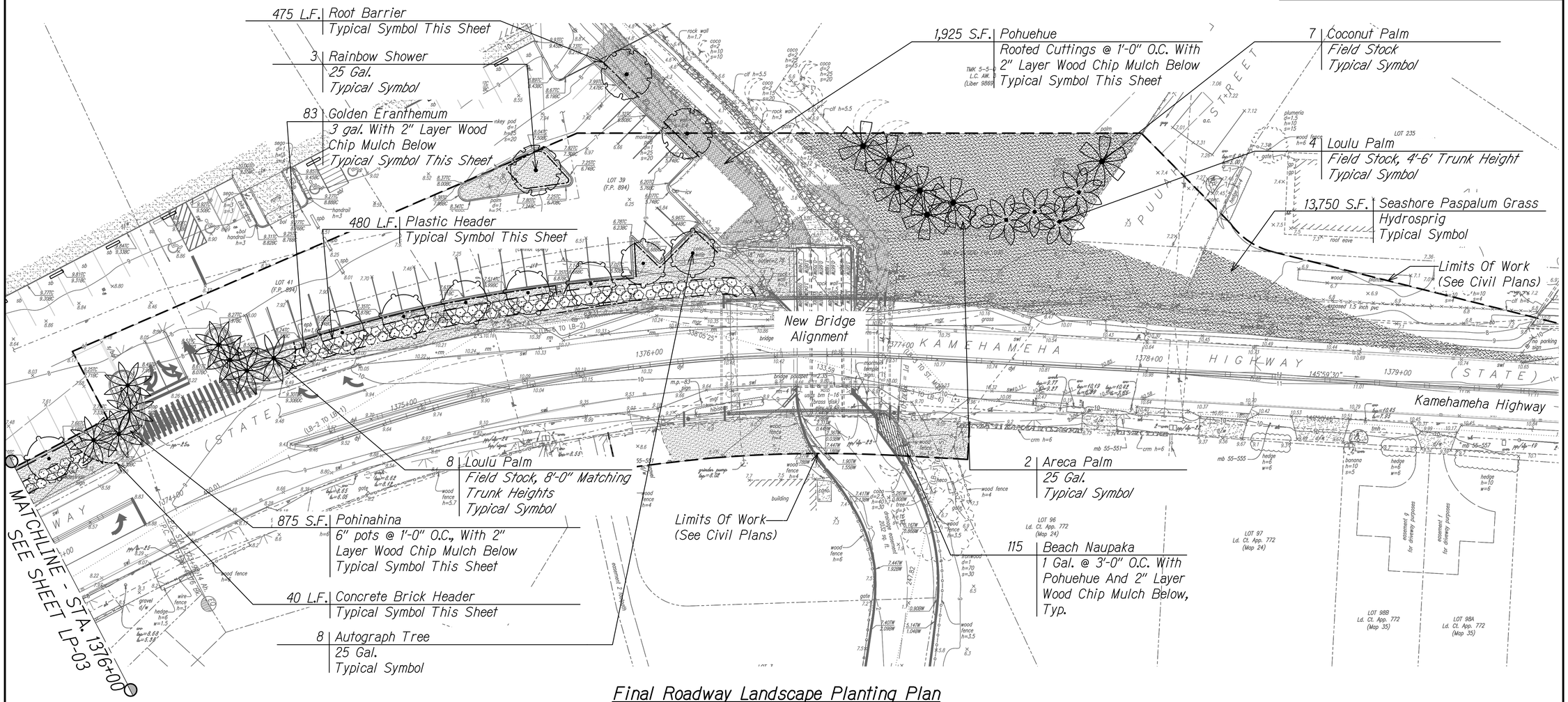

Final Roadway Landscape Planting Plan

Scale: 1"=20'

Notes:

1. Contractor shall verify all final tree/palm locations with the Engineer prior to installation. Final tree/palm locations shall be flagged and coordinated with the Engineer.
2. Contractor shall provide a new permanent below-grade irrigation system for planting areas fronting Laie Shopping Center to replace the existing irrigation system components damaged during construction operations. The Contractor shall locate and connect to the existing irrigation mainline. All new irrigation valves shall be connected to the existing irrigation controller. Refer to sheet LI-01 for new permanent irrigation system.
3. Contractor shall provide a temporary automatic irrigation system for all new and relocated trees, shrubs, ground cover, and grass areas not receiving a permanent irrigation system for the duration of the plant establishment period and shall be removed upon project acceptance or as directed by Engineer. Temporary automatic irrigation system shall be considered incidental to the various planting items.
4. Provide and incorporate 2" layer of soil amendments to 4" layer imported topsoil. Incorporate additional amendments as recommended by soil analysis.

ORIGINAL PLAN | NOTE BOOK No. | SURVEY PLOTTED BY | DRAWN BY | TRACED BY | DESIGNED BY | QUANTITIES BY | CHECKED BY | DATE

NORTH

0 1 3 5 feet
SCALE: 1" = 20'

RUSSELL Y.J. CHUNG
LICENSED PROFESSIONAL LANDSCAPE ARCHITECT
No. 6076
HAWAII, U.S.A.

LICENSE EXPIRES 4/30/24

THIS WORK WAS PREPARED BY ME OR UNDER MY SUPERVISION

STATE OF HAWAII
DEPARTMENT OF TRANSPORTATION
HIGHWAYS DIVISION

FINAL ROADWAY LANDSCAPE PLANTING PLAN

Kamehameha Highway
Laieloa Stream Bridge Replacement
Federal-Aid Project No. BR-083-1(58)

Scale: As Shown Date: September 2023

SHEET No. LP-02 OF 19 SHEETS

FED. ROAD DIST. NO.	STATE	FED. AID PROJ. NO.	FISCAL YEAR	SHEET NO.	TOTAL SHEETS
HAWAII	HAW.	BR-083-1(58)	2023	126	129

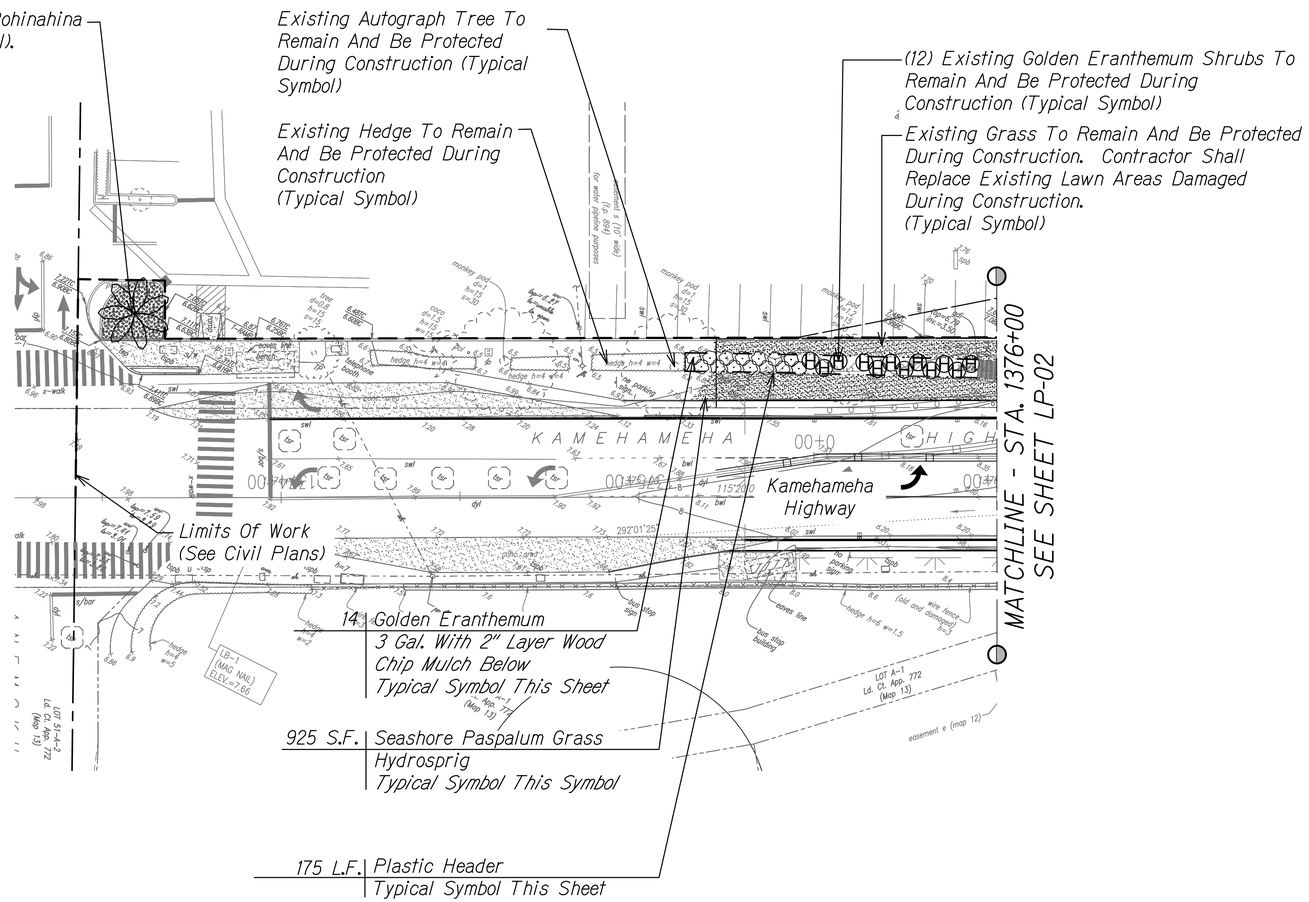

Final Roadway Landscape Planting Plan

Scale: 1"=20'

Notes:

1. Contractor shall verify all final tree/palm locations with the Engineer prior to installation. Final tree/palm locations shall be flagged and coordinated with the Engineer.
2. Contractor shall provide a new permanent below-grade irrigation system for planting areas fronting Laie Shopping Center to replace the existing irrigation system components damaged during construction operations. The Contractor shall locate and connect to the existing irrigation mainline. All new irrigation valves shall be connected to the existing irrigation controller. Refer to sheet LI-01 and LI-02 for new permanent irrigation system.
3. Contractor shall provide a temporary automatic irrigation system for all new and relocated trees, shrubs, ground cover, and grass areas not receiving a permanent irrigation system for the duration of the plant establishment period and shall be removed upon project acceptance or as directed by Engineer. Temporary automatic irrigation system shall be considered incidental to the various planting items.
4. Provide and incorporate 2" layer of soil amendments to 4" layer imported topsoil. Incorporate additional amendments as recommended by soil analysis.

ORIGINAL PLAN | SURVEY PLOTTED BY | DRAWN BY | TRACED BY | DESIGNED BY | QUANTITIES BY | CHECKED BY | DATE
NOTE BOOK No.

NORTH
0 1 3 5 feet
SCALE: 1" = 20'

RUSSELL Y.J. CHUNG
LICENSED PROFESSIONAL LANDSCAPE ARCHITECT
No. 6076
HAWAII, U.S.A.

LICENSE EXPIRES 4/30/24

THIS WORK WAS PREPARED BY ME OR UNDER MY SUPERVISION

STATE OF HAWAII
DEPARTMENT OF TRANSPORTATION
HIGHWAYS DIVISION

FINAL ROADWAY LANDSCAPE PLANTING PLAN

Kamehameha Highway
Laieloa Stream Bridge Replacement
Federal-Aid Project No. BR-083-1(58)

Scale: As Shown Date: September 2023

SHEET No. LP-03 OF 19 SHEETS

FED. ROAD DIST. NO.	STATE	FED. AID PROJ. NO.	FISCAL YEAR	SHEET NO.	TOTAL SHEETS
HAWAII	HAW.	BR-083-1(58)	2023	127	129

Note:
Trunk must be protected from rope sling burns and abrasions during moving. Tree shall be plumb. If tree is leaning at the end of the plant establishment period, the tree shall be rejected.

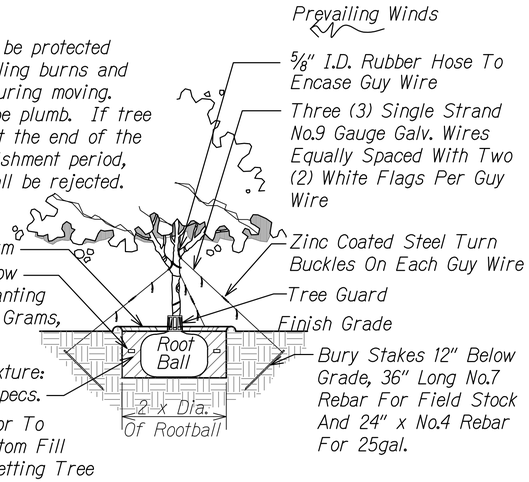

TREE PLANTING AND GUYING (1 / LP-04 LP-04)

Scale: Not to Scale

Notes:
1. Single stem shrubs shall be plumb. If shrub is leaning at the end of the plant establishment period, it shall be replaced at the contractor's expense.
2. Immediately after planting, water heavily to ensure soil settles around roots.

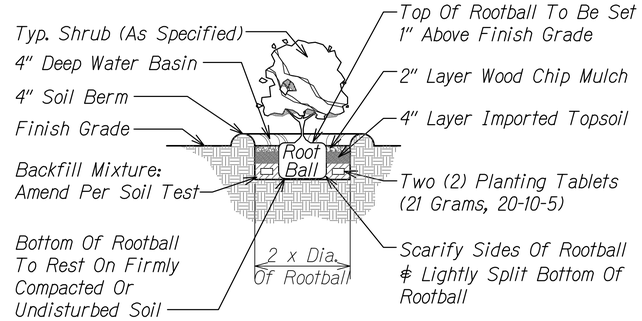

SHRUB PLANTING (3 / LP-04 LP-04)

Scale: Not to Scale

Notes:
1. S = Spacing, (refer to plant list for spacing).
2. Use spacing layout for shrubs, ground covers, and annuals.

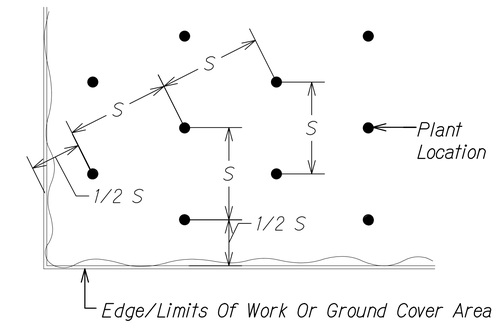

TRIANGULAR SPACING (5 / LP-04 LP-04)

Scale: Not to Scale

Notes:
1. Trunk must be protected from rope sling burns and abrasions during moving.
2. Protect heart and tip from damage and breakage during transporting and transplanting.

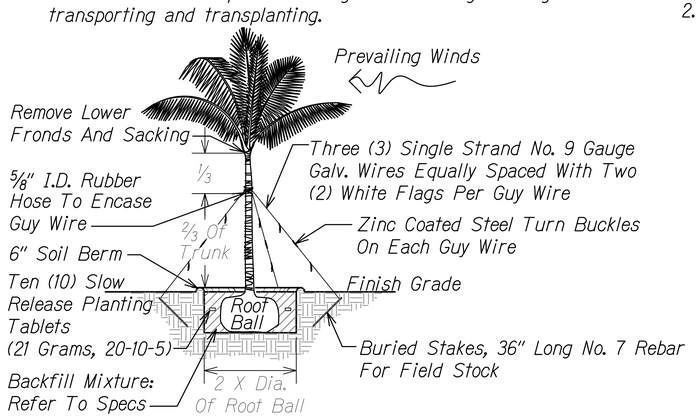

PALM PLANTING (2 / LP-04 LP-04)

Scale: Not to Scale

Notes:
1. Ground covers shall be plumb. If ground cover is leaning at the end of the plant establishment period, it shall be replaced at the contractor's expense.
2. Immediately after planting, water heavily to ensure soil settles around roots.

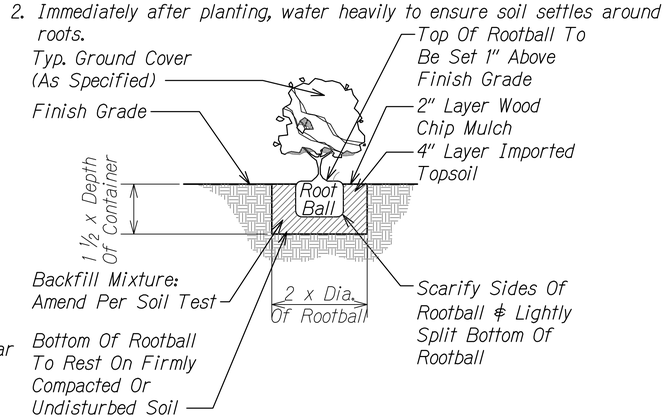

GROUND COVER PLANTING (4 / LP-04 LP-04)

Scale: Not to Scale

Hydro-Mulch:
Shall Be Specifically Processed Fiber Containing No Growth Or Germination Inhibiting Factors. It Shall Be Such That After Addition And Agitation In The Hydraulic Equipment With Seeds/Sprigs, Fertilizer, Water, Geobinders, And Other Additives Not Detrimental To Plant Growth, The Fibers Will Form A Homogeneous Slurry When Hydraulically Sprayed On The Soil. The Fibers Shall Form A Blotter-like Ground Cover Which Readily Absorbs Water And Allows Infiltration. Complete Coverage Of The Surface Shall Be Attained.

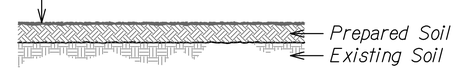

HYDRO-MULCHING DETAIL (6 / LP-04 LP-04)

Scale: Not to Scale

ORIGINAL PLAN	SURVEY PLOTTED BY	DATE
	DRAWN BY	
	TRACED BY	
NOTE BOOK	DESIGNED BY	
	QUANTITIES BY	
No.	CHECKED BY	

RUSSELL Y.J. CHUNG
LICENSED PROFESSIONAL LANDSCAPE ARCHITECT No. 6076
HAWAII, U.S.A.

LICENSE EXPIRES 4/30/24

THIS WORK WAS PREPARED BY ME OR UNDER MY SUPERVISION

STATE OF HAWAII
DEPARTMENT OF TRANSPORTATION
HIGHWAYS DIVISION

PLANTING DETAILS - 1

Kamehameha Highway
Laieloa Stream Bridge Replacement
Federal-Aid Project No. BR-083-1(58)

Scale: As Shown Date: September 2023

SHEET No. LP-04 OF 19 SHEETS

FED. ROAD DIST. NO.	STATE	FED. AID PROJ. NO.	FISCAL YEAR	SHEET NO.	TOTAL SHEETS
HAWAII	HAW.	BR-083-1(58)	2023	128	129

Notes:
1. Place top edge of plastic root barrier at finish grade and secure w/ manufacturer provided pins.
2. Seams shall have minimum 3" overlap. Refer to manufacturer instructions for bonding the seam.
3. Do not allow gaps in barrier during installation or backfilling.
4. Refer to planting plan for tree locations.

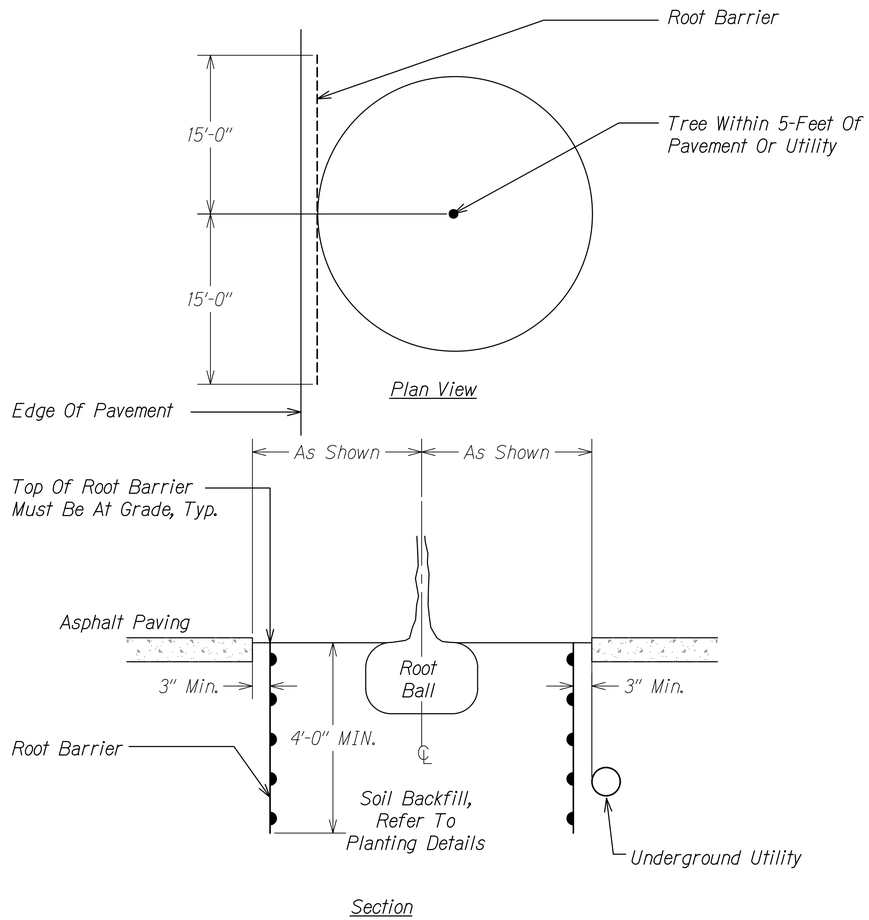

ROOT BARRIER 1 LP-05 LP-05

Scale: Not to Scale

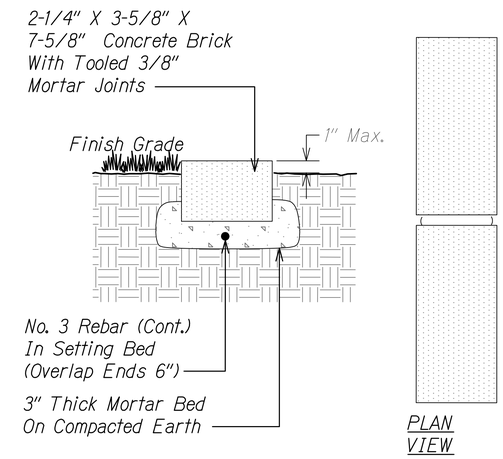

CONCRETE BRICK HEADER 2 LP-05 LP-05

Scale: Not to Scale

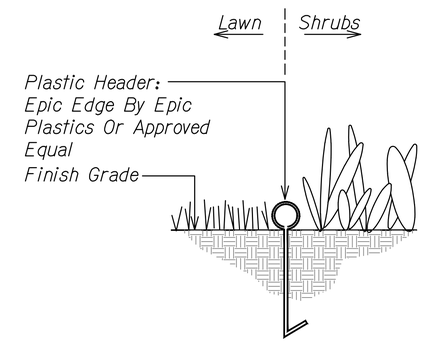

Note:
Refer to manufacturer's specifications for installation instructions.

PLASTIC HEADER 3 LP-05 LP-05

Scale: Not to Scale

ORIGINAL PLAN	SURVEY PLOTTED BY	DATE
	DRAWN BY	
NOTE BOOK	TRACED BY	
	DESIGNED BY	
	QUANTITIES BY	
No.	CHECKED BY	

RUSSELL Y.J. CHUNG
LICENSED PROFESSIONAL LANDSCAPE ARCHITECT
No. 6076
HAWAII, U.S.A.

LICENSE EXPIRES 4/30/24

THIS WORK WAS PREPARED BY ME OR UNDER MY SUPERVISION

STATE OF HAWAII
DEPARTMENT OF TRANSPORTATION
HIGHWAYS DIVISION

PLANTING DETAILS - 2

Kamehameha Highway
Laieloa Stream Bridge Replacement
Federal-Aid Project No. BR-083-1(58)

Scale: As Shown Date: September 2023

SHEET No. LP-05 OF 19 SHEETS

FED. ROAD DIST. NO.	STATE	FED. AID PROJ. NO.	FISCAL YEAR	SHEET NO.	TOTAL SHEETS
HAWAII	HAW.	BR-083-1(58)	2023	129	129

PLANT SCHEDULE - TEMPORARY ROADWAY

SHRUBS	QTY	BOTANICAL NAME	COMMON NAME	CONT	REMARKS
	12	Pseuderanthemum reticulatum	Golden Eranthemum	3 Gal	3' Tall Min., Bushy
GROUND COVERS	QTY	BOTANICAL NAME	COMMON NAME	CONT	REMARKS
	1,800 SF	Paspalum vaginatum	Seashore Paspalum		Hydrosprig
MISC. ITEMS				CONT	REMARKS
	110 LF	Plastic Header			
	2,255 SF	Soil Amendments	2" Layer	2" Layer	
	28 CY	Imported Topsoil	4" Layer	4" Layer	
	2 CY	Wood Chip Mulch		2" Layer	Below All Shrub And Ground Cover

PLANT SCHEDULE - FINAL ROADWAY

TREES	QTY	BOTANICAL NAME	COMMON NAME	CONT	REMARKS
	8	Pritchardia martii	Loulu Palm	Field Stock	8' Brown Trunk Height Min. With Matching Trunk Heights
	3	Cassia x nealiae	Rainbow Shower	25 Gal.	2" Caliper, 8' Clear Trunk Min.
	1	Roystonea Regia	Royal Palm	Fieldstock	2" Caliper, 8' Clear Trunk Min.
	8	Clusia rosea	Autograph Tree	25 Gal.	2" Caliper, 8' Clear Trunk Min.
	7	Cocos nucifera	Coconut Palm	Field Stock	6'-8" Trunk Height Min.
	4	Pritchardia martii	Loulu Palm	Field Stock	4'-6' Brown Trunk Ht. Min.
	2	Chrysalidocarpus lutescens	Areca Palm	25 Gal.	3 Canes Min.
SHRUBS	QTY	BOTANICAL NAME	COMMON NAME	CONT	REMARKS
	99	Pseuderanthemum reticulatum	Golden Eranthemum	3 Gal	3' Tall Min., Bushy
SHRUB AREAS	QTY	BOTANICAL NAME	COMMON NAME	CONT	REMARKS
	115	Scaevola sericea	Naupaka Kahakai	1 Gal @ 12" O.C.	18" Tall Min., Bushy
GROUND COVERS	QTY	BOTANICAL NAME	COMMON NAME	CONT	REMARKS
	1,925 SF	Ipomoea pes-caprae	Pohuehue	Rooted Cuttings @ 12" O.C.	Triangular Spacing
	14,700 SF	Paspalum vaginatum	Seashore Paspalum		Hydrosprig
	1,150 SF	Vitex rotundifolia	Pohinahina	6" Pots @ 12" O.C.	Triangular Spacing
MISC. ITEMS				CONT	REMARKS
	40 LF	Concrete Brick Header			
	600 LF	Plastic Header			
	375 LF	Plastic Root Barrier		48" Depth	
	20,800 SF	Soil Amendments		2" Layer	
	255 CY	Imported Topsoil		4" Layer	
	33.5 CY	Wood Chip Mulch		2" Layer	Below All Shrub And Ground Cover

ORIGINAL PLAN
NOTE BOOK No.
SURVEY PLOTTED BY
DRAWN BY
TRACED BY
DESIGNED BY
QUANTITIES BY
CHECKED BY
DATE

RUSSELL Y.J. CHUNG
LICENSED PROFESSIONAL LANDSCAPE ARCHITECT
No. 6076
HAWAII, U.S.A.

LICENSE EXPIRES 4/30/24

THIS WORK WAS PREPARED BY ME OR UNDER MY SUPERVISION

STATE OF HAWAII
DEPARTMENT OF TRANSPORTATION
HIGHWAYS DIVISION

PLANTING SCHEDULE

Kamehameha Highway
Laieloa Stream Bridge Replacement
Federal-Aid Project No. BR-083-1(58)

Scale: As Shown Date: September 2023

SHEET No. LP-06 OF 19 SHEETS